Service Manual

SR5300 /N1B/N1G/U1B/K1G/A1B
SR6300 /N1B/N1G/U1B/K1G
AV Surround Receiver

SR5300 /N/K/A

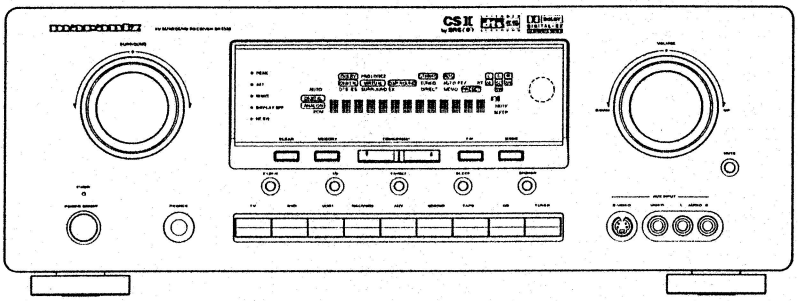

SR6300 /U

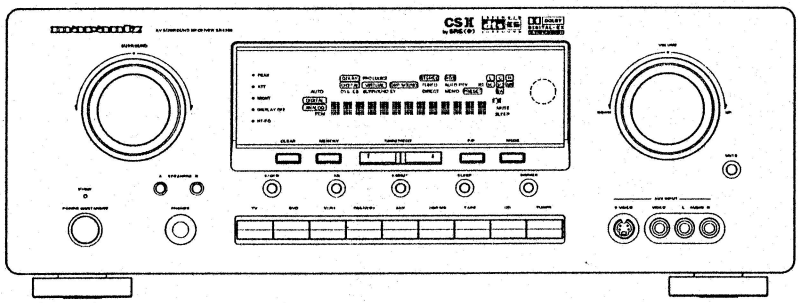

TABLE OF CONTENTS

SECTION	PAGE
1. TECHNICAL SPECIFICATIONS	1
2. WIRING DIAGRAM	5
3. BLOCK DIAGRAM	7
4. SCHEMATIC DIAGRAM	9
5. PARTS LOCATION	29
6. IC DATA	48
7. EXPLODED VIEW AND PARTS LIST	51
8. SERVICE PROCEDURE	59
9. ELECTRICAL PARTS LIST	62

Please use this service manual with referring to the user guide (D.F.U.) without fail.
修理の際は、必ず取扱説明書を準備し操作方法を確認の上作業を行ってください。

marantz®

SR5300 / SR6300

11AW855010 MIT
First Issue 2002.10

MARANTZ DESIGN AND SERVICE

Using superior design and selected high grade components, **MARANTZ** company has created the ultimate in stereo sound. Only original **MARANTZ** parts can insure that your **MARANTZ** product will continue to perform to the specifications for which it is famous.

Parts for your **MARANTZ** equipment are generally available to our National Marantz Subsidiary or Agent.

ORDERING PARTS :

Parts can be ordered either by mail or by Fax.. In both cases, the correct part number has to be specified.

The following information must be supplied to eliminate delays in processing your order :

1. Complete address
2. Complete part numbers and quantities required
3. Description of parts
4. Model number for which part is required
5. Way of shipment
6. Signature : any order form or Fax. must be signed, otherwise such part order will be considered as null and void.

USA

MARANTZ AMERICA, INC
1100 MAPLEWOOD DRIVE
ITASCA, IL. 60143
USA
PHONE : 630 - 741 - 0300
FAX : 630 - 741 - 0301

EUROPE / TRADING

MARANTZ EUROPE B.V.
P. O. BOX 8744, BUILDING SILVERPOINT
BEEMDSTRAAT 11, 5653 MA EINDHOVEN
THE NETHERLANDS
PHONE : +31 - 40 - 2507844
FAX : +31 - 40 - 2507860

CANADA

LENBROOK INDUSTRIES LIMITED
633 GRANITE COURT,
PICKERING, ONTARIO L1W 3K1
CANADA
PHONE : 905 - 831 - 6333
FAX : 905 - 831 - 6936

PROFESSIONAL **AMERICAS**

SUPERSCOPE TECHNOLOGIES, INC.
MARANTZ PROFESSIONAL PRODUCTS
2640 WHITE OAK CIRCLE, SUITE A
AURORA, ILLINOIS 60504 USA
PHONE : 630 - 820 - 4800
FAX : 630 - 820 - 8103

PROFESSIONAL **AUSTRALIA**

TECHNICAL AUDIO GROUP PTY, LTD
558 DARLING STREET,
BALMAIN, NSW 2041,
AUSTRALIA
PHONE : 61 - 2 - 9810 - 5300
FAX : 61 - 2 - 9810 - 5355

PROFESSIONAL **HONG KONG**

Jolly ProAudio Broadcast Engineering Ltd.
UNIT 2, 10F, WAH HUNG CENTRE,
41 HUNG TO ROAD, KWUN TONG, KLN.,
HONG KONG
PHONE : 852 - 21913660
FAX : 852 - 21913990

AUSTRALIA

QualiFi Pty Ltd,
24 LIONEL ROAD,
MT. WAVERLEY VIC 3149
AUSTRALIA
PHONE : +61 - (0)3 - 9543 - 1522
FAX : +61 - (0)3 - 9543 - 3677

THAILAND

MRZ STANDARD CO., LTD
746 - 754 MAHACHAI ROAD.,
WANGBURAPAPIROM, PHRANAKORN,
BANGKOK, 10200 THAILAND
PHONE : +66 - 2 - 222 9181
FAX : +66 - 2 - 224 6795

SINGAPORE

WO KEE HONG DISTRIBUTION PTE LTD
130 JOO SENG ROAD
#03-02 OLIVINE BUILDING
SINGAPORE 368357
PHONE : +65 6858 5535 / +65 6381 8621
FAX : +65 6858 6078

NEW ZEALAND

WILDASH AUDIO SYSTEMS NZ
14 MALVERN ROAD MT ALBERT
AUCKLAND NEW ZEALAND
PHONE : +64 - 9 - 8451958
FAX : +64 - 9 - 8463554

TAIWAN

PAI- YUING CO., LTD.
6 TH FL NO, 148 SUNG KIANG ROAD,
TAIPEI, 10429, TAIWAN R.O.C.
PHONE : +886 - 2 - 25221304
FAX : +886 - 2 - 25630415

MALAYSIA

WO KEE HONG ELECTRONICS SDN. BHD.
2ND FLOOR BANGUNAN INFINITE CENTRE
LOT 1, JALAN 13/6, 46200 PETALING JAYA
SELANGOR DARUL EHSAN, MALAYSIA
PHONE : +60 - 3 - 7954 8088
FAX : +60 - 3 - 7954 7088

JAPAN *Technical*

MARANTZ JAPAN, INC.
35- 1, 7- CHOME, SAGAMIONO
SAGAMIHARA - SHI, KANAGAWA
JAPAN 228-8505
PHONE : +81 42 748 1013
FAX : +81 42 741 9190

日本マランツ株式会社
本 社 〒228-8505
神奈川県相模原市相模大野7-35-1
営業本部 〒150-0022
東京都渋谷区恵比寿南1-11-9

KOREA

MK ENTERPRISES LTD.
ROOM 604/605, ELECTRO-OFFICETEL, 16-58,
3GA, HANGANG-RO, YONGSAN-KU, SEOUL
KOREA
PHONE : +822 - 3232 - 155
FAX : +822 - 3232 - 154

SHOCK, FIRE HAZARD SERVICE TEST :

CAUTION : After servicing this appliance and prior to returning to customer, measure the resistance between either primary AC cord connector pins (with unit NOT connected to AC mains and its Power switch ON), and the face or Front Panel of product and controls and chassis bottom.

Any resistance measurement less than 1 Megohms should cause unit to be repaired or corrected before AC power is applied, and verified before it is return to the user/customer.

Ref. UL Standard No. 1492.

In case of difficulties, do not hesitate to contact the Technical Department at above mentioned address.

020816MIT

1. TECHNICAL SPECIFICATIONS

SR5300

FM TUNER SECTION
- Frequency Range ..... 87.5 - 108.0MHz
- Usable Sensitivity ..... IHF 1.8µV/16.4dBf
- Signal to Noise Ratio ..... Mono/Stereo 75/70dB
- Distortion ..... Mono/Stereo 0.2/0.3%
- Stereo Separation 1kHz 45dB
- Alternate Channel Selectivity ..... ±300kHz 60dB(/K/N/A)
  ..... ±400kHz 60dB(/U)
- Image Rejection 98MHz 70dB
- Tuner Output Level ... 1kHz,±40kHz Dev 500mV(/K/N/A)
  ..... 1kHz,±75kHz Dev 500mV(/U)

AM TUNER SECTION
- Frequency Range ..... AM: 522 - 1611kHz(/K/N/A)
  ..... AM: 520 - 1710kHz(/U)
- Signal to Noise Ratio 50dB
- Usable Sensitivity ..... Loop 400µV/m
- Distortion ..... 400Hz, 30% Mod. 0.5%
- Selectivity ..... ±18kHz 60dB(/K/N/A)
  ..... ±20kHz 60dB(/U)

AUDIO SECTION
- Power Output (20Hz - 20kHz/THD=0.08%)
  - Front L&R ..... 8Ω 90W / Ch
  - Center ..... 8Ω 90W / Ch
  - Surround L&R ..... 8Ω 90W / Ch
  - Surround Center ..... 8Ω 90W / Ch
  - Front L&R ..... 6Ω 105W / Ch
  - Center ..... 6Ω 105W / Ch
  - Surround L&R ..... 6Ω 105W / Ch
  - Surround Back ..... 6Ω 105W / Ch
- Maximum Power Output (1 kHz/EIAJ)
  - Front L&R ..... 6Ω 135W / Ch
  - Center ..... 6Ω 135W / Ch
  - Surround L&R ..... 6Ω 135W / Ch
  - Surround Center ..... 6Ω 135W / Ch
- Input Sensitivity/Impedance
  - Linear ..... 340 mV/ 47 KΩ
- Signal to Noise Ratio
  - Linear ..... 105 dB

VIDEO SECTION
- Television Format ..... NTSC/PAL(/K/N/A)
  ..... NTSC(/U)
- Input Level/Impedance 1Vp-p/ 75Ω
- Output Level/Impedance 1Vp-p/ 75Ω
- Video Frequency Response ..... 5Hz to 8MHz(±1dB)
- S/N 60dB

GENERAL
- Power Requirement . AC110-115/220-230V 50/60Hz(/K)
  ..... AC230V 50Hz(/N/A)
  ..... AC120V 60Hz(/U)
- Power Consumption ..... 310W(3.4A)
- Dimension (MAX)
  - Width ..... 440mm(17-5/16in)
  - Height ..... 164mm(6-7/16in)
  - Depth ..... 425mm(16-3/4in)
  - Weight ..... 12.9Kg(28.38lbs)

ACCESSORIES
- Remote Control Unit RC5300SR 1
- FM Feeder Antenna 1
- FM Antenna Converter 1
- AM Loop Antenna 1
- AAA-Size Batteries 2

SR6300

FM TUNER SECTION
- Frequency Range ..... 87.5 - 108.0MHz
- Usable Sensitivity ..... IHF 1.8µV/16.4dBf
- Signal to Noise Ratio ..... Mono/Stereo 75/70dB
- Distortion ..... Mono/Stereo 0.2/0.3%
- Stereo Separation 1kHz 45dB
- Alternate Channel Selectivity ..... ±300kHz 60dB(/K/N)
  ..... ±400kHz 60dB(/U)
- Image Rejection 98MHz 70dB
- Tuner Output Level ..... 1kHz,±40kHz Dev 500mV(/K/N)
  ..... 1kHz,±75kHz Dev 500mV(/U)

AM TUNER SECTION
- Frequency Range ..... AM: 522 - 1611kHz(/K/N)
  ..... AM: 520 - 1710kHz(/U)
- Signal to Noise Ratio 50dB
- Usable Sensitivity ..... Loop 400µV/m
- Distortion ..... 400Hz, 30% Mod. 0.5%
- Selectivity ..... ±18kHz 60dB(/K/N)
  ..... ±20kHz 60dB(/U)

AUDIO SECTION
- Power Output (20Hz - 20kHz/THD=0.08%)
  - Front L&R ..... 8Ω 100W / Ch
  - Center ..... 8Ω 100W / Ch
  - Surround L&R ..... 8Ω 100W / Ch
  - Surround Center ..... 8Ω 100W / Ch
  - Front L&R ..... 6Ω 125W / Ch
  - Center ..... 6Ω 125W / Ch
  - Surround L&R ..... 6Ω 125W / Ch
  - Surround Back ..... 6Ω 125W / Ch
- Maximum Power Output (1 kHz/EIAJ)
  - Front L&R ..... 6Ω 155W / Ch
  - Center ..... 6Ω 155W / Ch
  - Surround L&R ..... 6Ω 155W / Ch
  - Surround Center ..... 6Ω 155W / Ch
- Input Sensitivity/Impedance
  - Linear ..... 340 mV/ 47 KΩ
- Signal to Noise Ratio
  - Linear ..... 105 dB

VIDEO SECTION
- Television Format ..... NTSC/PAL(/K/N)
  ..... NTSC(/U)
- Input Level/Impedance 1Vp-p/ 75Ω
- Output Level/Impedance 1Vp-p/ 75Ω
- Video Frequency Response ..... 5Hz to 8MHz(±1dB)
- S/N 60dB

GENERAL
- Power Requirement . AC110-115/220-230V 50/60Hz(/K)
  ..... AC230V 50Hz(/N)
  ..... AC120V 60Hz(/U)
- Power Consumption ..... 380W(4.0A)
- Dimension (MAX)
  - Width ..... 440mm(17-5/16in)
  - Height ..... 164mm(6-7/16in)
  - Depth ..... 425mm(16-3/4in)
  - Weight ..... 14.8Kg(32.7lbs)

ACCESSORIES
- Remote Control Unit RC7300SR 1
- FM Feeder Antenna 1
- FM Antenna Converter 1
- AM Loop Antenna 1
- AAA-Size Batteries 2

The relation between the selected surround mode and the input signal

The surround mode is selected with the surround mode selector knob of the SR6300 or the remote control unit. However, the sound from the speakers depend upon the relationship between the selected surround mode and the input signal. They are as follows;

SURROUND MODE	INPUT SIGNAL	OUTPUT CHANNELS					FLUORESCENT INDICATOR	
		L/R	C	SL/SR	SC	SW	FORMAT STATUS & SURROUND MODE	TEMPORARY DISPLAY STATUS
AUTO	DOLBY DIGITAL(5.1CH)	O	O	O	-	O	AUTO, DOLBY DIGITAL	AUTO
	DOLBY DIGITAL(2CH)	O	-	-	-	O	AUTO, DOLBY, DIGITAL	AUTO
	DOLBY DIGITAL (2CH:Lt/Rt)	O	O	O	-	O	AUTO, DOLBY, DIGITAL, PRO LOGIC II	AUTO
	DOLBY DIGITAL EX(6.1CH)	O	O	O	O	O	AUTO, DOLBY, DIGITAL, SURROUND EX	AUTO
	96KHZ PCM	O	-	-	-	-	AUTO, STEREO, PCM	AUTO -> 96KHz
	PCM(AUDIO)	O	-	-	-	O	AUTO, STEREO	AUTO
	ANALOG	O	-	-	-	O	AUTO, STEREO	AUTO
	DTS(5.1CH)	O	O	O	-	O	AUTO, DTS	AUTO
	DTS-ES(6.1CH)	O	O	O	O	O	AUTO, DTS, ES	AUTO
DD PL2 MOVIE	DOLBY DIGITAL(5.1CH)	O	O	O	-	O	DOLBY, DIGITAL	DOLBY D
	DOLBY DIGITAL(2CH)	O	O	O	-	O	DOLBY, DIGITAL, PRO LOGIC II	DOLBY PL2 MV
	DOLBY DIGITAL(2CH:Lt/Rt)	O	O	O	-	O	DOLBY, DIGITAL, PRO LOGIC II	DOLBY PL2 MV
	DOLBY DIGITAL EX(6.1CH)	O	O	O	-	O	DOLBY, DIGITAL	DOLBY D
	96KHZ PCM	-	-	-	-	-		
	PCM(AUDIO)	O	O	O	-	O	DOLBY, PRO LOGIC II, PCM	DOLBY PL2 MV
	ANALOG	O	O	O	-	O	DOLBY, PRO LOGIC II	DOLBY PL2 MV
	DTS(5.1CH)	-	-	-	-	-		
	DTS-ES(6.1CH)	-	-	-	-	-		
DD PL2 MUSIC	DOLBY DIGITAL(5.1CH)	O	O	O	-	O	DOLBY, DIGITAL	DOLBY D
	DOLBY DIGITAL(2CH)	O	O	O	-	O	DOLBY, DIGITAL, PRO LOGIC II	DOLBY PL2 MS
	DOLBY DIGITAL(2CH:Lt/Rt)	O	O	O	-	O	DOLBY, DIGITAL, PRO LOGIC II	DOLBY PL2 MS
	DOLBY DIGITAL EX(6.1CH)	O	O	O	-	O	DOLBY, DIGITAL	DOLBY D
	96KHZ PCM	-	-	-	-	-		
	PCM(AUDIO)	O	O	O	-	O	DOLBY, PRO LOGIC II, PCM	DOLBY PL2 MS
	ANALOG	O	O	O	-	O	DOLBY, PRO LOGIC II	DOLBY PL2 MS
	DTS(5.1CH)	-	-	-	-	-		
	DTS-ES(6.1CH)	-	-	-	-	-		
DD PRO LOGIC	DOLBY DIGITAL(5.1CH)	O	O	O	-	O	DOLBY, DIGITAL	DOLBY D
	DOLBY DIGITAL(2CH)	O	O	O	-	O	DOLBY, DIGITAL, PRO LOGIC	DOLBY PL
	DOLBY DIGITAL(2CH:Lt/Rt)	O	O	O	-	O	DOLBY, DIGITAL, PRO LOGIC	DOLBY PL
	DOLBY DIGITAL EX(6.1CH)	O	O	O	-	O	DOLBY, DIGITAL	DOLBY D
	96KHZ PCM	-	-	-	-	-		
	PCM(AUDIO)	O	O	O	-	O	DOLBY, PRO LOGIC, PCM	DOLBY PL
	ANALOG	O	O	O	-	O	DOLBY, PRO LOGIC	DOLBY PL
	DTS(5.1CH)	-	-	-	-	-		
	DTS-ES(6.1CH)	-	-	-	-	-		
EX/ES	DOLBY DIGITAL(5.1CH)	O	O	O	O	O	DOLBY, DIGITAL, SURROUND EX	DOLBY D EX
	DOLBY DIGITAL(2CH)	-	-	-	-	-		
	DOLBY DIGITAL (2CH:Lt/Rt)	-	-	-	-	-		
	DOLBY DIGITAL EX(6.1CH)	O	O	O	O	O	DOLBY, DIGITAL, SURROUND EX	DOLBY D EX
	96KHZ PCM	-	-	-	-	-		
	PCM(AUDIO)	-	-	-	-	-		
	ANALOG	-	-	-	-	-		
	DTS(5.1CH)	O	O	O	O	O	DTS, ES	DTS ES
	DTS-ES(6.1CH)	O	O	O	O	O	DTS, ES	DTS ES
DTS	DOLBY DIGITAL(5.1CH)	-	-	-	-	-		
	DOLBY DIGITAL(2CH)	-	-	-	-	-		
	DOLBY DIGITAL(2CH:Lt/Rt)	-	-	-	-	-		
	DOLBY DIGITAL EX(6.1CH)	-	-	-	-	-		
	96KHZ PCM	-	-	-	-	-		
	PCM(AUDIO)	-	-	-	-	-		
	ANALOG	-	-	-	-	-		
	DTS(5.1CH)	O	O	O	-	O	DTS	DTS
	DTS-ES(6.1CH)	O	O	O	-	O	DTS	DTS
Neo:6 CINEMA Neo:6 MUSIC	DOLBY DIGITAL(5.1CH)	-	-	-	-	-		
	DOLBY DIGITAL(2CH)	-	-	-	-	-		
	DOLBY DIGITAL(2CH:Lt/Rt)	-	-	-	-	-		
	DOLBY DIGITAL EX(6.1CH)	-	-	-	-	-		
	96KHZ PCM	-	-	-	-	-		
	PCM(AUDIO)	O	O	O	O	O	PCM	NEO6 CINEMA or MUSIC
	ANALOG	O	O	O	O	O		NEO6 CINEMA or MUSIC
	DTS(5.1CH)	-	-	-	-	-		
	DTS-ES(6.1CH)	-	-	-	-	-		
MULTI CH. ST.	DOLBY DIGITAL(5.1CH)	O	O	O	O	O	DOLBY, DIGITAL, SURROUND EX	M-CH STEREO
	DOLBY DIGITAL(2CH)	O	O	O	O	O	DOLBY, DIGITAL	M-CH STEREO
	DOLBY DIGITAL(2CH:Lt/Rt)	O	O	O	O	O	DOLBY, DIGITAL	M-CH STEREO
	DOLBY DIGITAL EX(6.1CH)	O	O	O	O	O	DOLBY, DIGITAL, SURROUND EX	M-CH STEREO
	96KHZ PCM	-	-	-	-	-		
	PCM(AUDIO)	O	O	O	O	O	PCM	M-CH STEREO
	ANALOG	O	O	O	O	O		M-CH STEREO
	DTS(5.1CH)	O	O	O	O	O	DTS, ES	M-CH STEREO
	DTS-ES(6.1CH)	O	O	O	O	O	DTS, ES	M-CH STEREO

SURROUND MODE	INPUT SIGNAL	OUTPUT CHANNELS					FLUORESCENT INDICATOR	
		L/R	C	SL/SR	SC	SW	FORMAT STATUS & SURROUND MODE	TEMPORARY DISPLAY STATUS
CS2 CINEMA CS2 MUSIC CS2 MONO	DOLBY DIGITAL(5.1CH)	-	-	-	-	-		
	DOLBY DIGITAL(2CH)	-	-	-	-	-		
	DOLBY DIGITAL(2CH:Lt/Rt)	-	-	-	-	-		
	DOLBY DIGITAL EX(6.1CH)	-	-	-	-	-		
	96KHZ PCM	-	-	-	-	-		
	PCM(AUDIO)	O	O	O	O	O	PCM	CS-2 CINEMA or MUSIC or MONO
	ANALOG	O	O	O	O	O		CS-2 CINEMA or MUSIC or MONO
	DTS(5.1CH)	-	-	-	-	-		
	DTS-ES(6.1CH)	-	-	-	-	-		
VIRTUAL	DOLBY DIGITAL(5.1CH)	O	-	-	-	O	VIRTUAL, DOLBY, DIGITAL	VIRTUAL
	DOLBY DIGITAL(2CH)	O	-	-	-	O	VIRTUAL, DOLBY, DIGITAL, PRO LOGIC	VIRTUAL
	DOLBY DIGITAL(2CH:Lt/Rt)	O	-	-	-	O	VIRTUAL, DOLBY, DIGITAL, PRO LOGIC	VIRTUAL
	DOLBY DIGITAL EX(6.1CH)	O	-	-	-	O	VIRTUAL, DOLBY, DIGITAL	VIRTUAL
	96KHZ PCM	-	-	-	-	-		
	PCM(AUDIO)	O	-	-	-	O	VIRTUAL, PRO LOGIC, PCM	VIRTUAL
	ANALOG	O	-	-	-	O	VIRTUAL, PRO LOGIC	VIRTUAL
	DTS(5.1CH)	O	-	-	-	O	VIRTUAL, DTS	VIRTUAL
	DTS-ES(6.1CH)	O	-	-	-	O	VIRTUAL, DTS	VIRTUAL
(DSP SURROUND) MOVIE HALL STADIUM MATRIX	DOLBY DIGITAL(5.1CH)	-	-	-	-	-		
	DOLBY DIGITAL(2CH)	-	-	-	-	-		
	DOLBY DIGITAL(2CH:Lt/Rt)	-	-	-	-	-		
	DOLBY DIGITAL EX(6.1CH)	-	-	-	-	-		
	96KHZ PCM	-	-	-	-	-		
	PCM(AUDIO)	O	O	O	O	O	DSP SOUND, PCM	MOVIE or HALL or STADIUM or MATRIX
	ANALOG	O	O	O	O	O	DSP SOUND	MOVIE or HALL or STADIUM or MATRIX
	DTS(5.1CH)	-	-	-	-	-		
	DTS-ES(6.1CH)	-	-	-	-	-		
STEREO	DOLBY DIGITAL(5.1CH)	O	-	-	-	O	STEREO, DOLBY, DIGITAL	STEREO
	DOLBY DIGITAL(2CH)	O	-	-	-	O	STEREO, DOLBY, DIGITAL	STEREO
	DOLBY DIGITAL(2CH:Lt/Rt)	O	-	-	-	O	STEREO, DOLBY, DIGITAL	STEREO
	DOLBY DIGITAL EX(6.1CH)	O	-	-	-	O	STEREO, DOLBY, DIGITAL	STEREO
	96KHZ PCM	O	-	-	-	-	STEREO, PCM	STEREO -> 96KHz
	PCM(AUDIO)	O	-	-	-	O	STEREO, PCM	STEREO
	ANALOG	O	-	-	-	O	STEREO	STEREO
	DTS(5.1CH)	O	-	-	-	O	STEREO, DTS	STEREO
	DTS-ES(6.1CH)	O	-	-	-	O	STEREO, DTS	STEREO
S-DIRECT	DOLBY DIGITAL(5.1CH)	O	O	O	-	O	DIRECT, DOLBY, DIGITAL	S-DIRECT
	DOLBY DIGITAL(2CH)	O	-	-	-	O	DIRECT, DOLBY, DIGITAL	S-DIRECT
	DOLBY DIGITAL(2CH:Lt/Rt)	O	O	O	-	O	DIRECT, DOLBY, DIGITAL	S-DIRECT
	DOLBY DIGITAL EX(6.1CH)	O	O	O	O	O	DIRECT, DOLBY, DIGITAL, SURROUND EX	S-DIRECT
	96KHZ PCM	O	-	-	-	-	DIRECT, STEREO, PCM	S-DIRECT -> 96KHz
	PCM(AUDIO)	O	-	-	-	O	DIRECT, STEREO, PCM	S-DIRECT
	ANALOG	O	-	-	-	O	DIRECT, STEREO	S-DIRECT
	DTS(5.1CH)	O	O	O	-	O	DIRECT, DTS	S-DIRECT
	DTS-ES(6.1CH)	O	O	O	O	O	DIRECT, DTS, ES	S-DIRECT

Note:

- Dolby Digital (2 ch: Lt/Rt): signal with Dolby Surround flag Speakers are full set.
- No sound outputs from the surround speaker, center speaker and subwoofer if the DVD disc has no surround data.

L/R : Front speakers
C : Center speaker
SL/SR : Surround speakers
SC : Surround Center speaker
SW : Sub woofer speaker

2. WIRING DIAGRAM

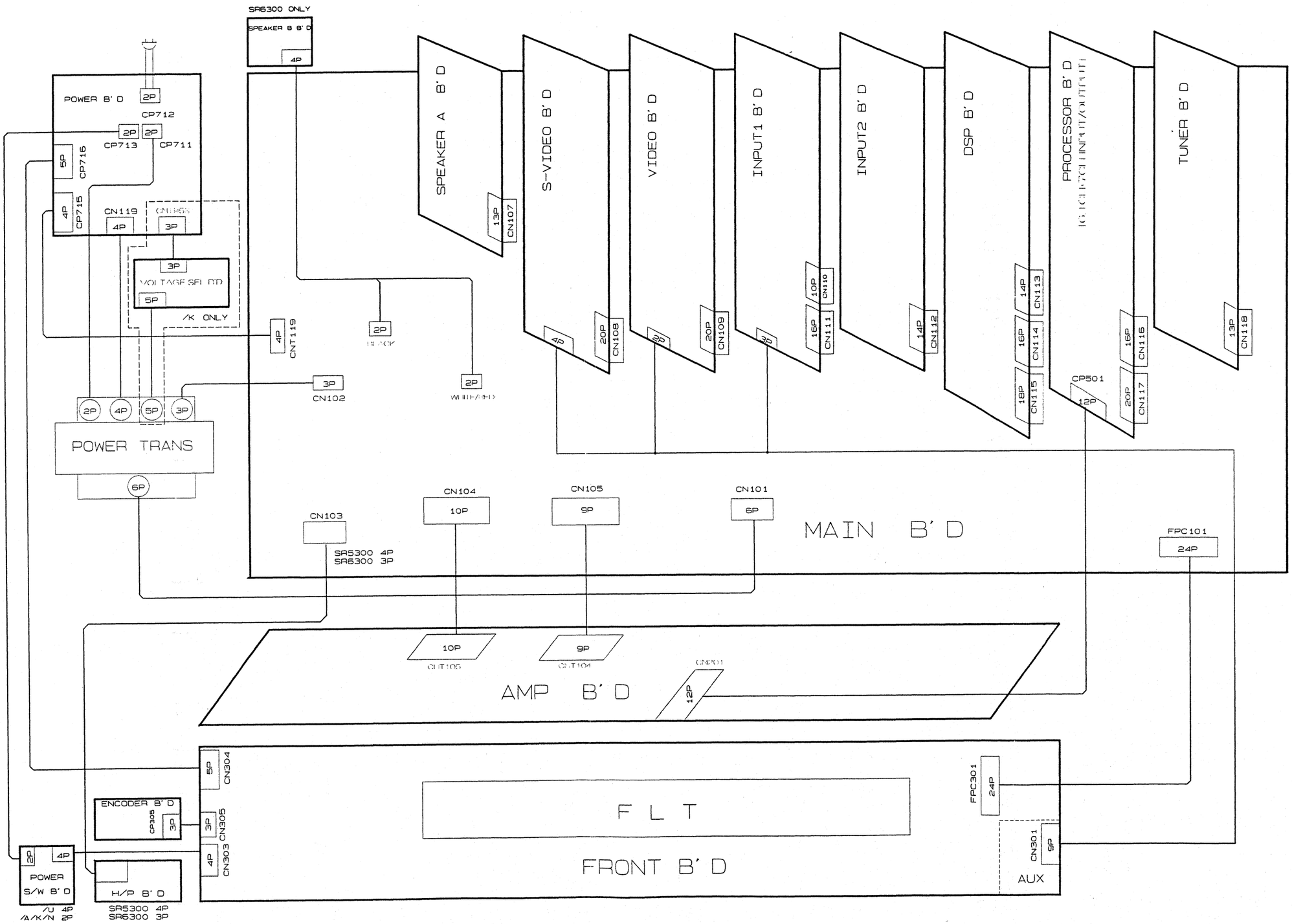

3. BLOCK DIAGRAM

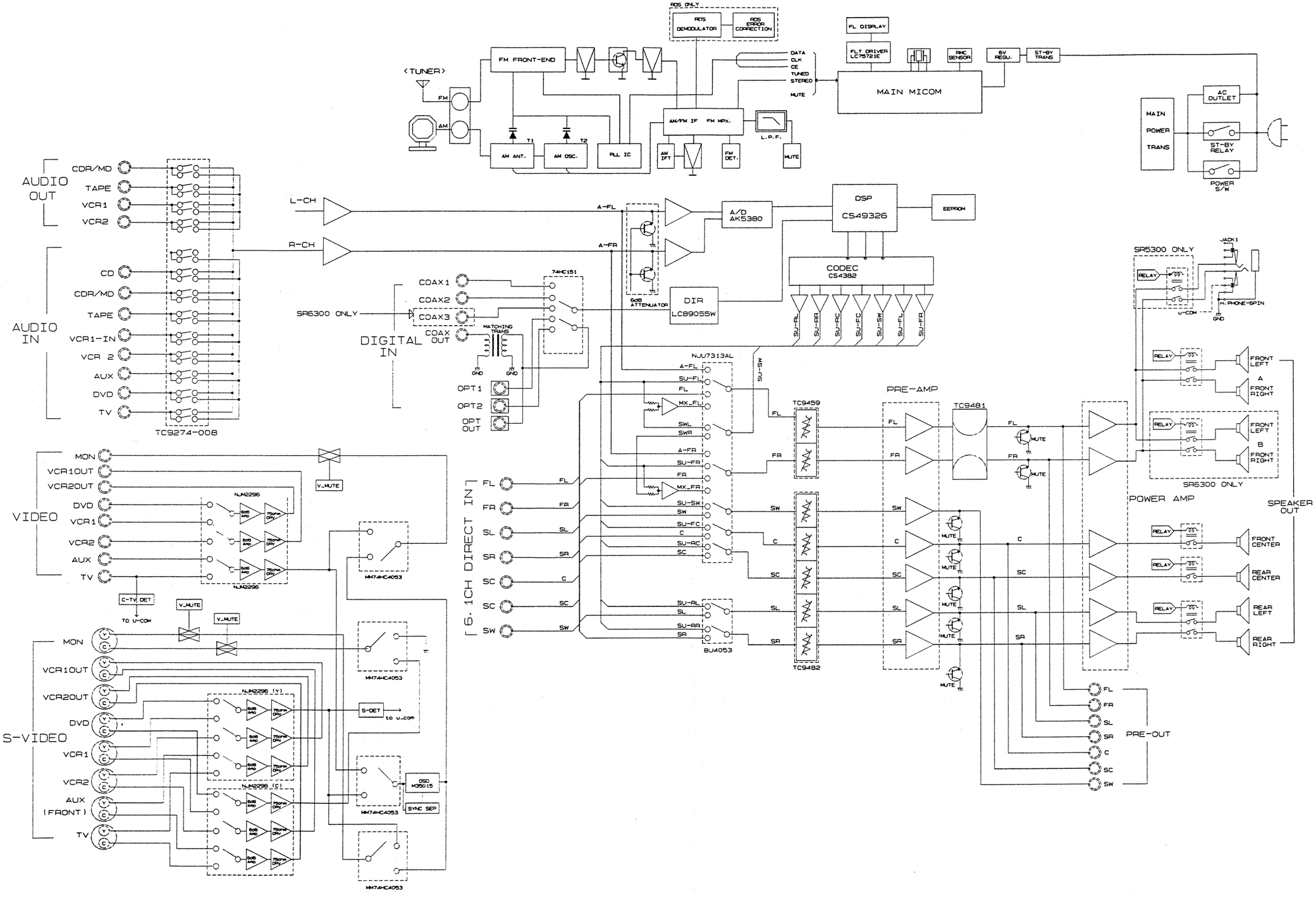

4. SCHEMATIC DIAGRAM

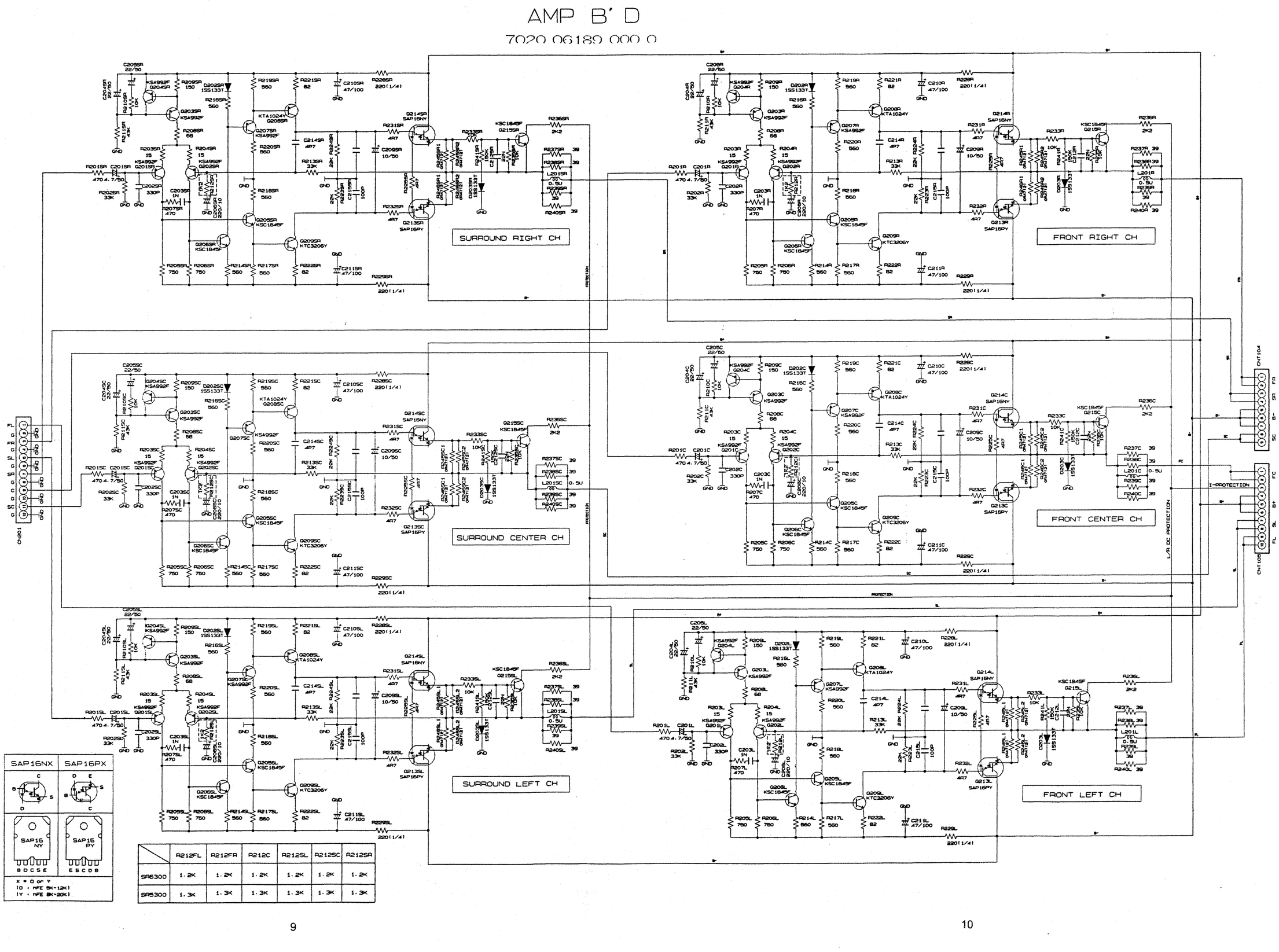

DSP BOARD

7020-06190-000-0

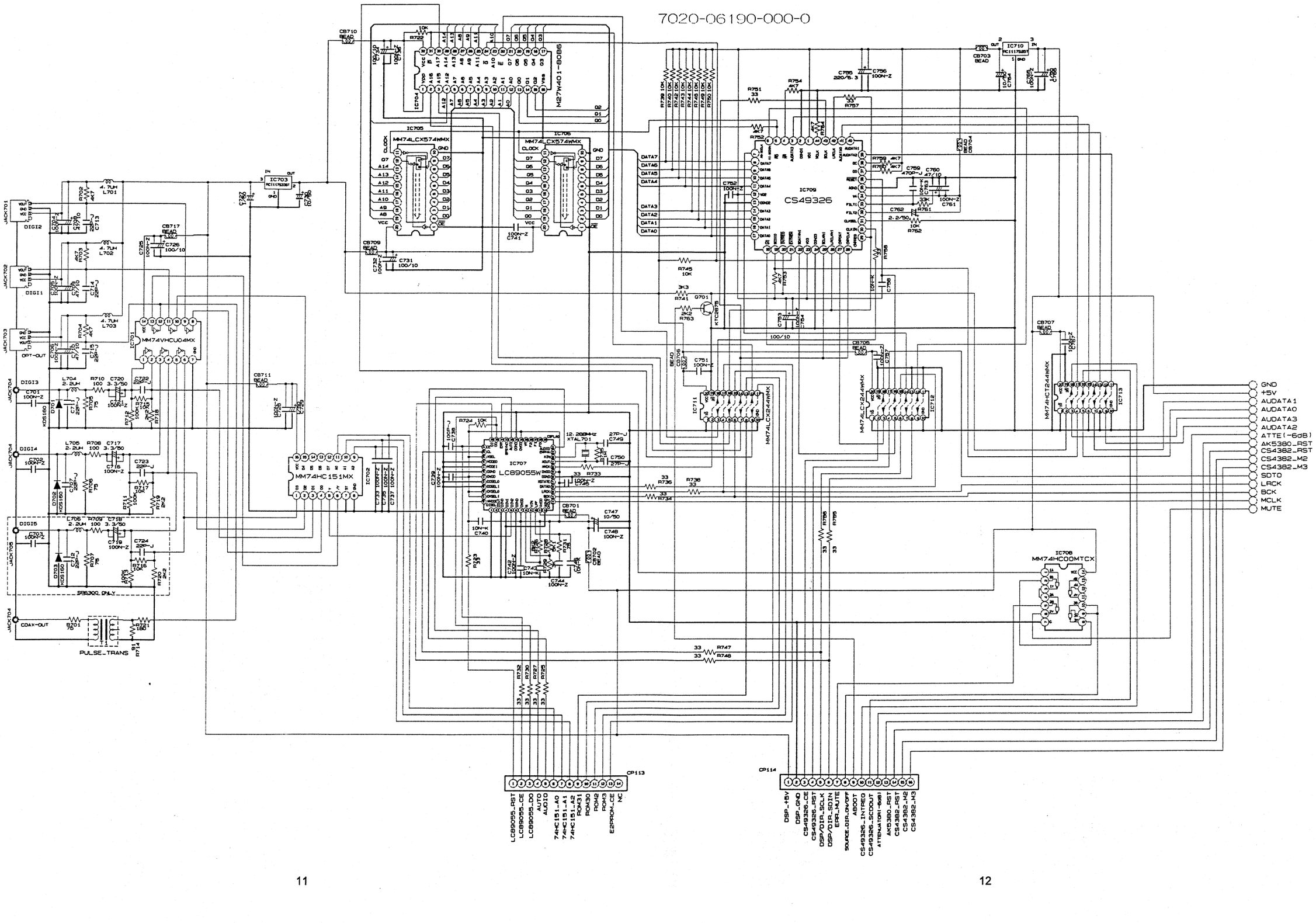

DSP BOARD

7020-06190-000-0

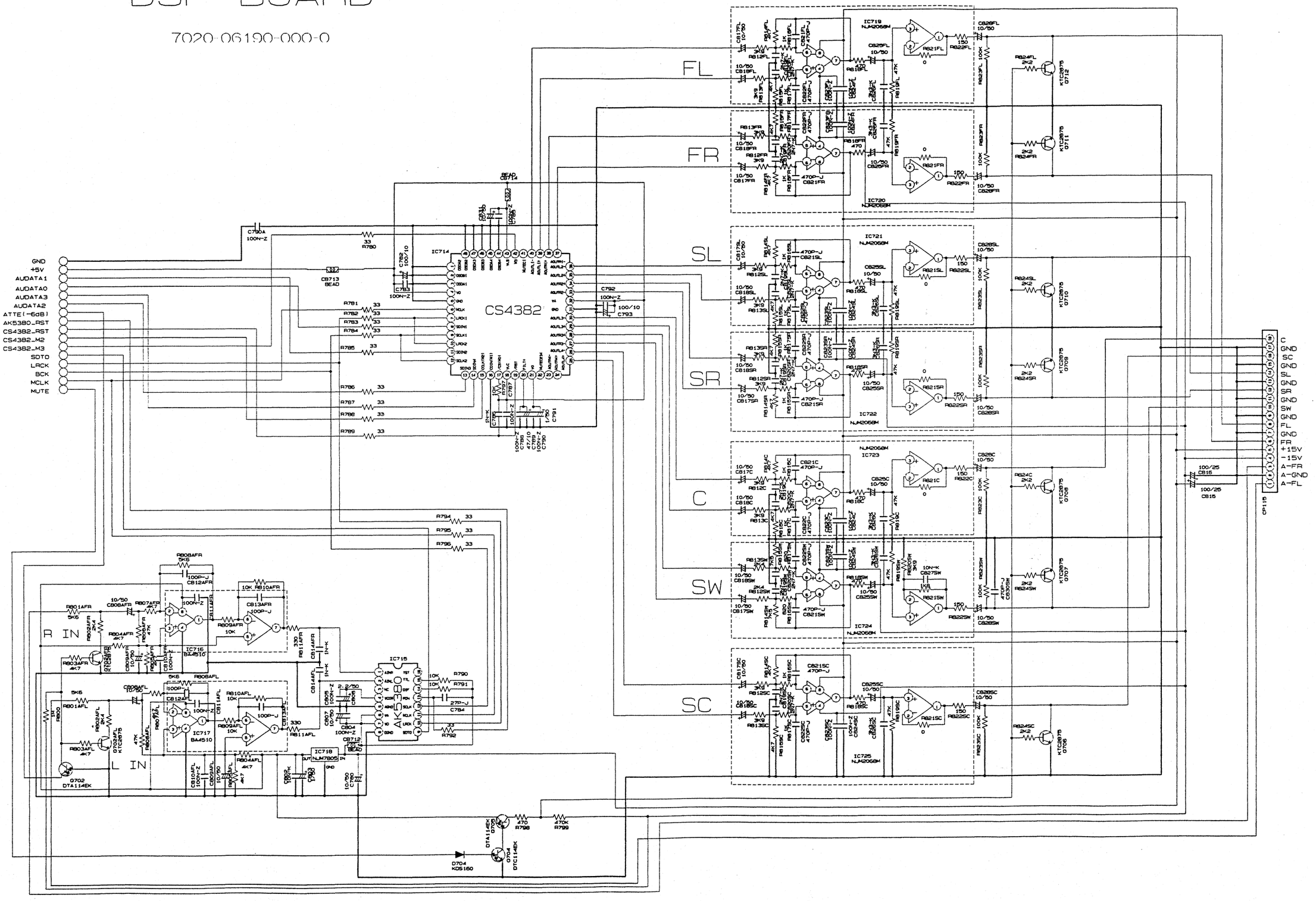

FRONT B' D

7020-06187-000-0

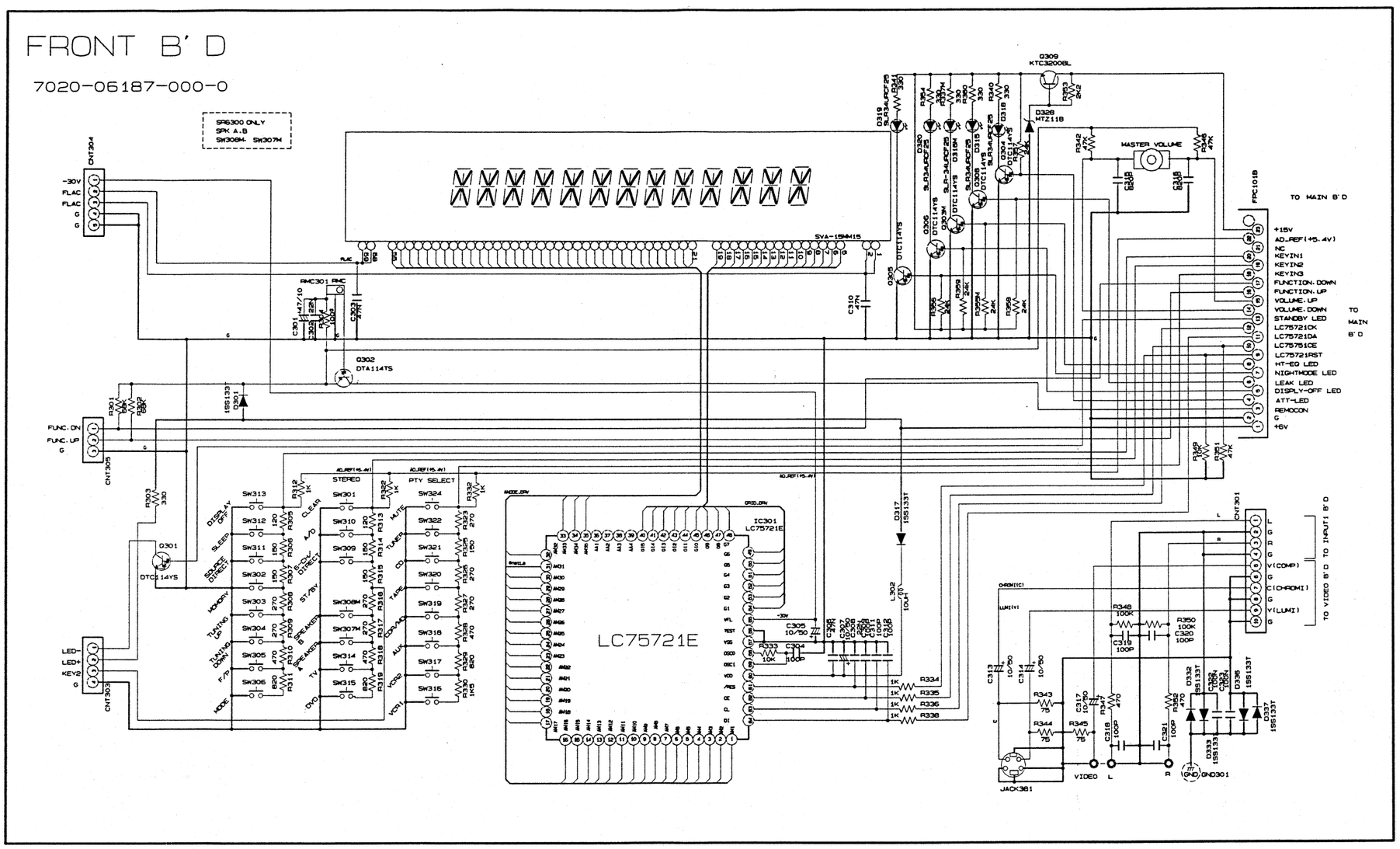

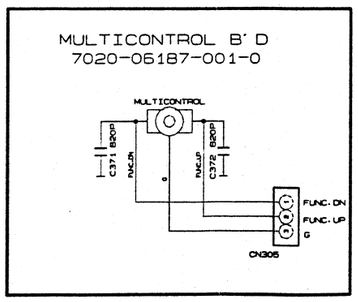

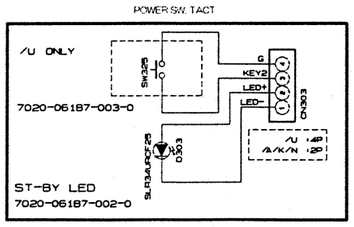

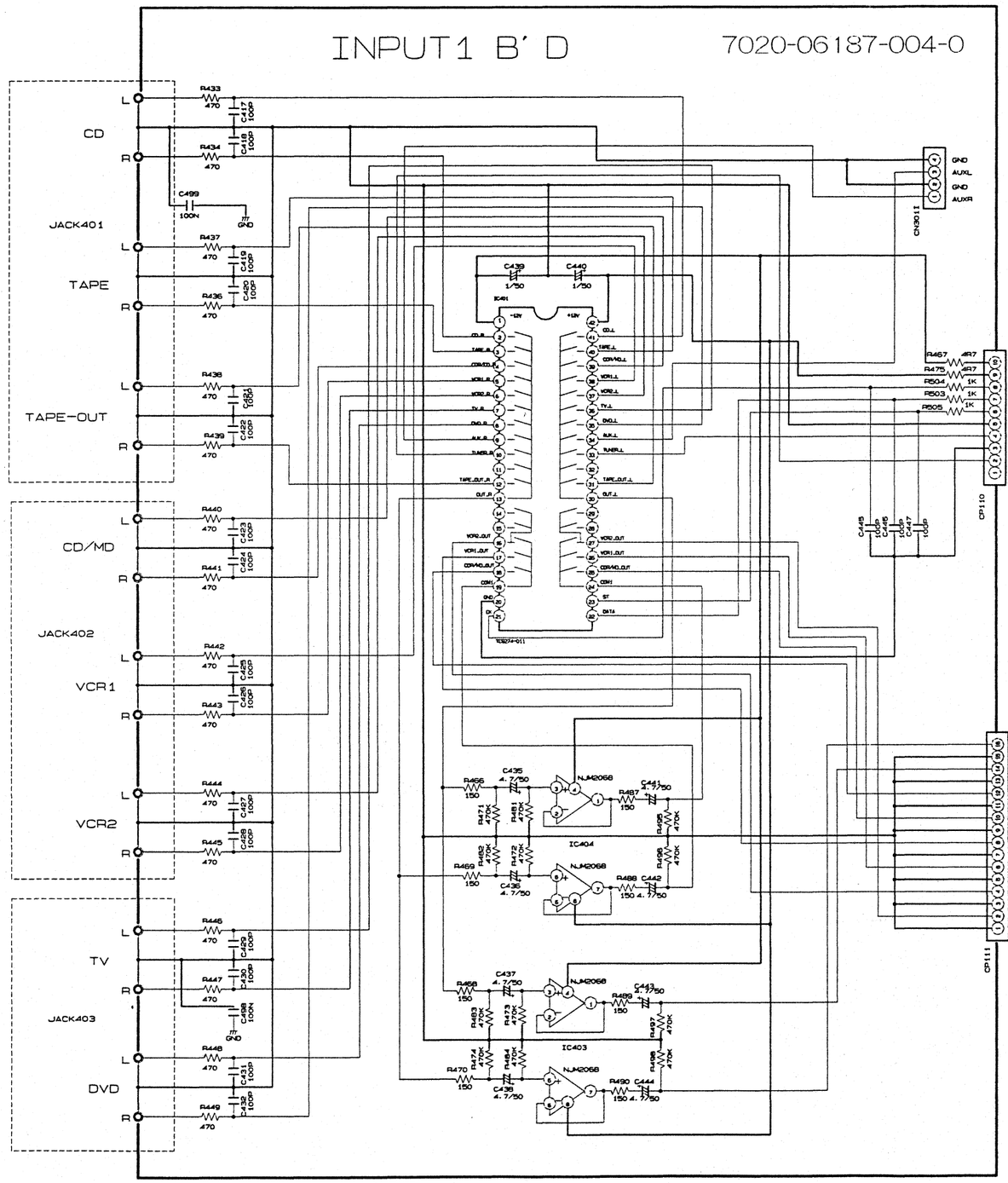
INPUT1 B' D
7020-06187-004-0
CD
JACK401
TAPE
TAPE-OUT
CD/MD
JACK402
VCR1
VCR2
TV
JACK403
DVD
IC404
IC403
NJM2068
CN301I
CP110
CP111
GND
AUXL
AUXR
-15V
+15V
CK
DA
CE
TUNERL
TUNERR
CHG
OUT
CD/MD-OUT
VCR1/OUT
VCR2/OUT

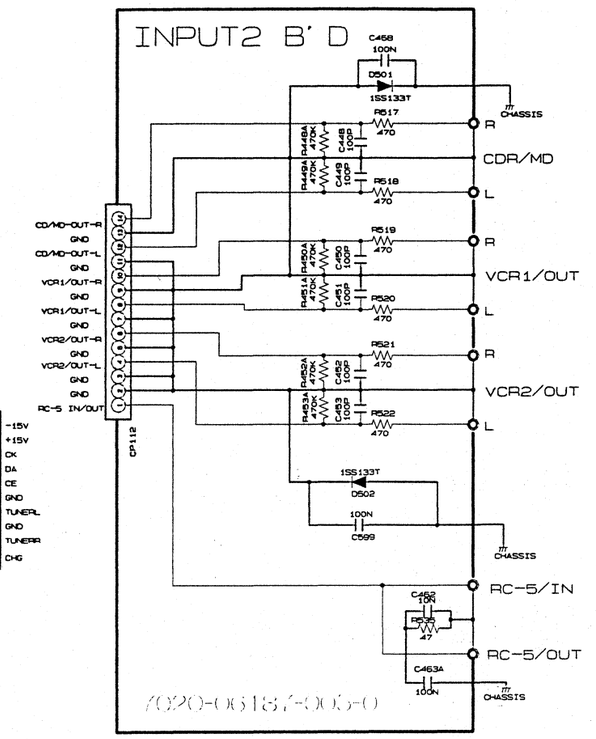
INPUT2 B' D
CDR/MD
VCR1/OUT
VCR2/OUT
RC-5/IN
RC-5/OUT
CHASSIS
CP112
7020-06187-005-0

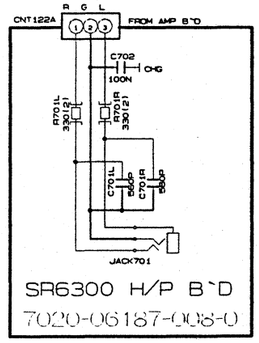
CNT122A
FROM AMP B'D
JACK701
SR6300 H/P B'D
7020-06187-008-0

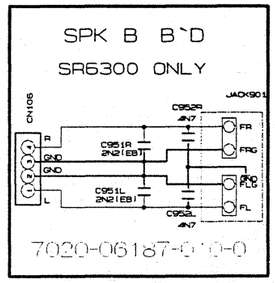
SPK B B'D
SR6300 ONLY
JACK901
CN106
7020-06187-010-0

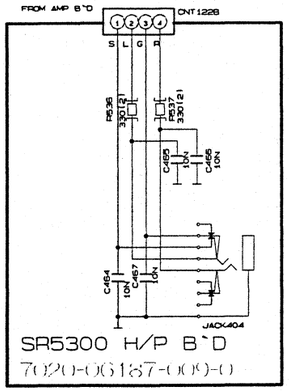
FROM AMP B'D
CNT122B
JACK404
SR5300 H/P B'D
7020-06187-009-0

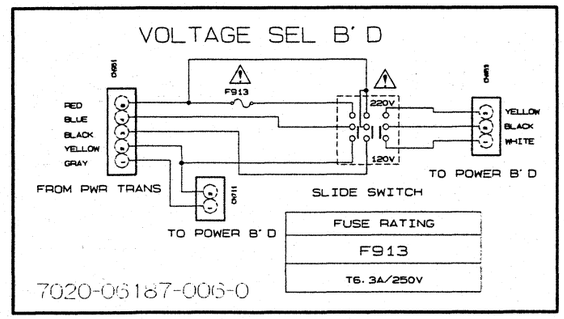
VOLTAGE SEL B' D
RED
BLUE
BLACK
YELLOW
GRAY
FROM PWR TRANS
F913
220V
120V
YELLOW
BLACK
WHITE
TO POWER B' D
SLIDE SWITCH
TO POWER B' D
FUSE RATING
F913
T6.3A/250V
7020-06187-006-0

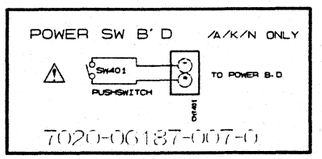
POWER SW B' D
/A/K/N ONLY
SW401
PUSHSWITCH
TO POWER B-D
7020-06187-007-0

To repair the tuner circuit board, replace the whole Tuner B'D A'ssy.
(Refer the Parts List.)

TUNER B' D

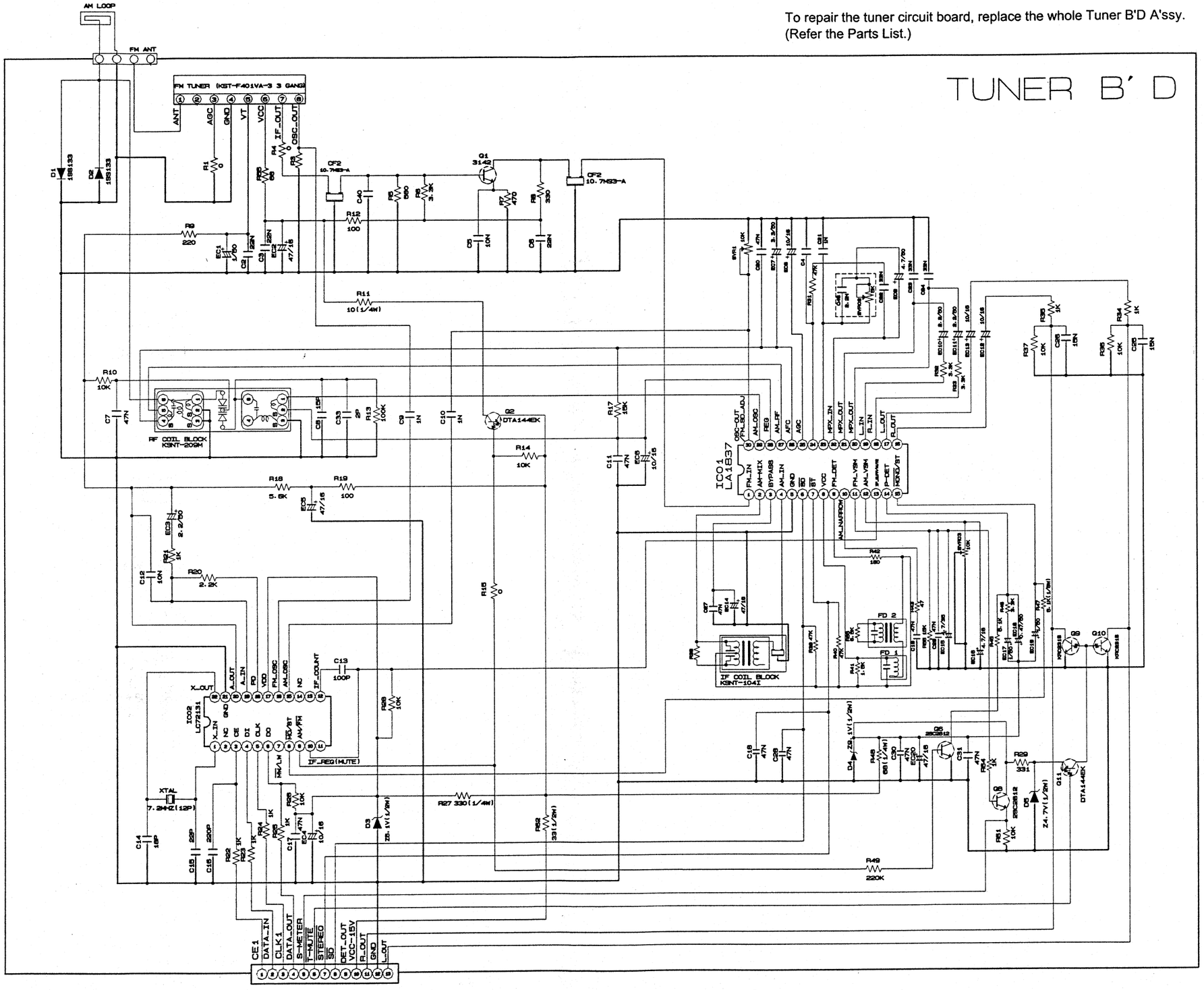

5. PARTS LOCATION

AMP

Q204R Q204SR Q204SC Q202SC Q201SC Q204C Q202C Q201C Q204SL Q202SL Q201SL Q204L
Q203R Q202R Q201R Q203SR Q202SR Q201SR Q205SC Q203C Q203SL Q203L Q202L Q201L
Q207R Q206R Q205R Q207SR Q206SR Q205SR Q207SC Q206SC Q205SC Q207C Q203C Q205C Q207SL Q206SL Q205SL Q207L Q206L Q205L
D202R Q208R Q209R D202SR Q208SR Q209SR D202SC Q208SC Q209SC D202C Q208C Q209C D202SL Q208SL Q209SL D202L Q208L Q209L
Q215R D203R Q215SR D203SR Q215SC Q203SC Q215C D203C Q215SL D203SL Q215L D203L

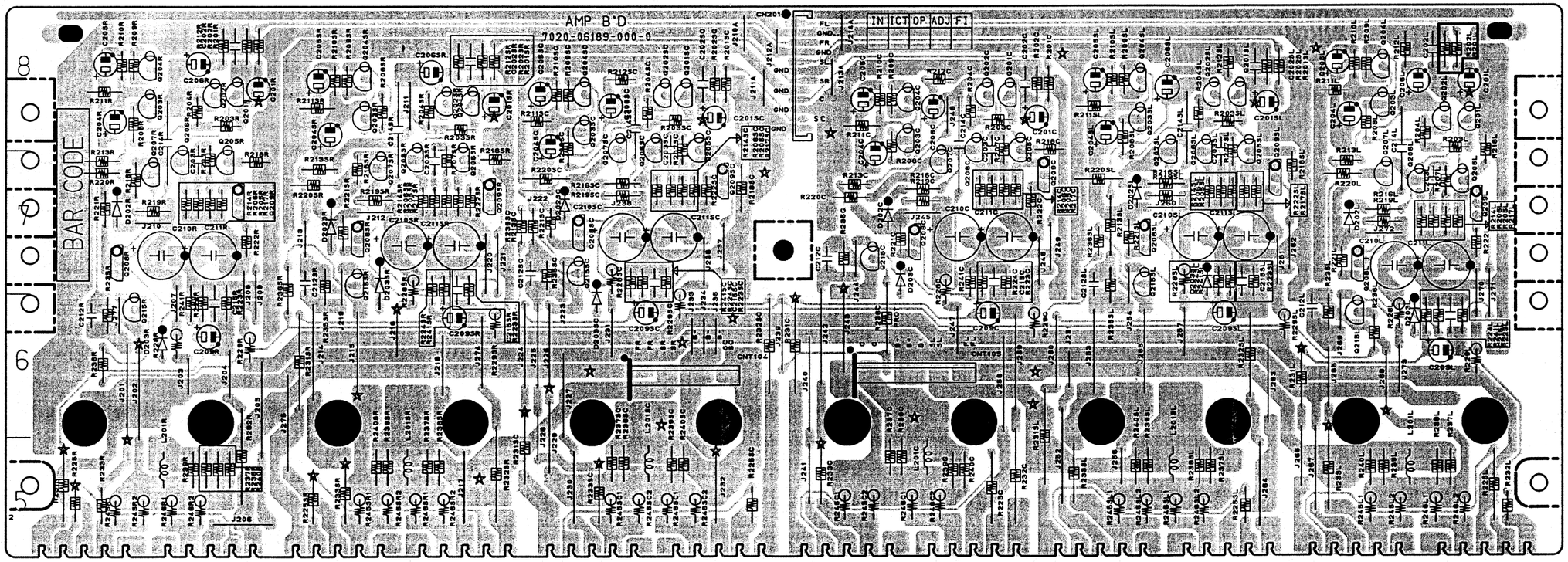

MAIN

D114 D116 D112 Q108-113 IC106 D123 Q124 Q123 Q129 Q128 Q122
D107 D115 Q102 Q101 D117 IC104 IC102 Q131-135
D106 D118 Q103 Q104 D110 D110A IC105 IC103 IC101 ZD129 IC108 IC107
D103 D109 D105 D111 D101 D108 D102 D104 Q136 ZD121
Q105 Q107 D113 Q106 D126 D129
Q115 - Q120 D120 D119 ZD122 D127 D124-126 Q130

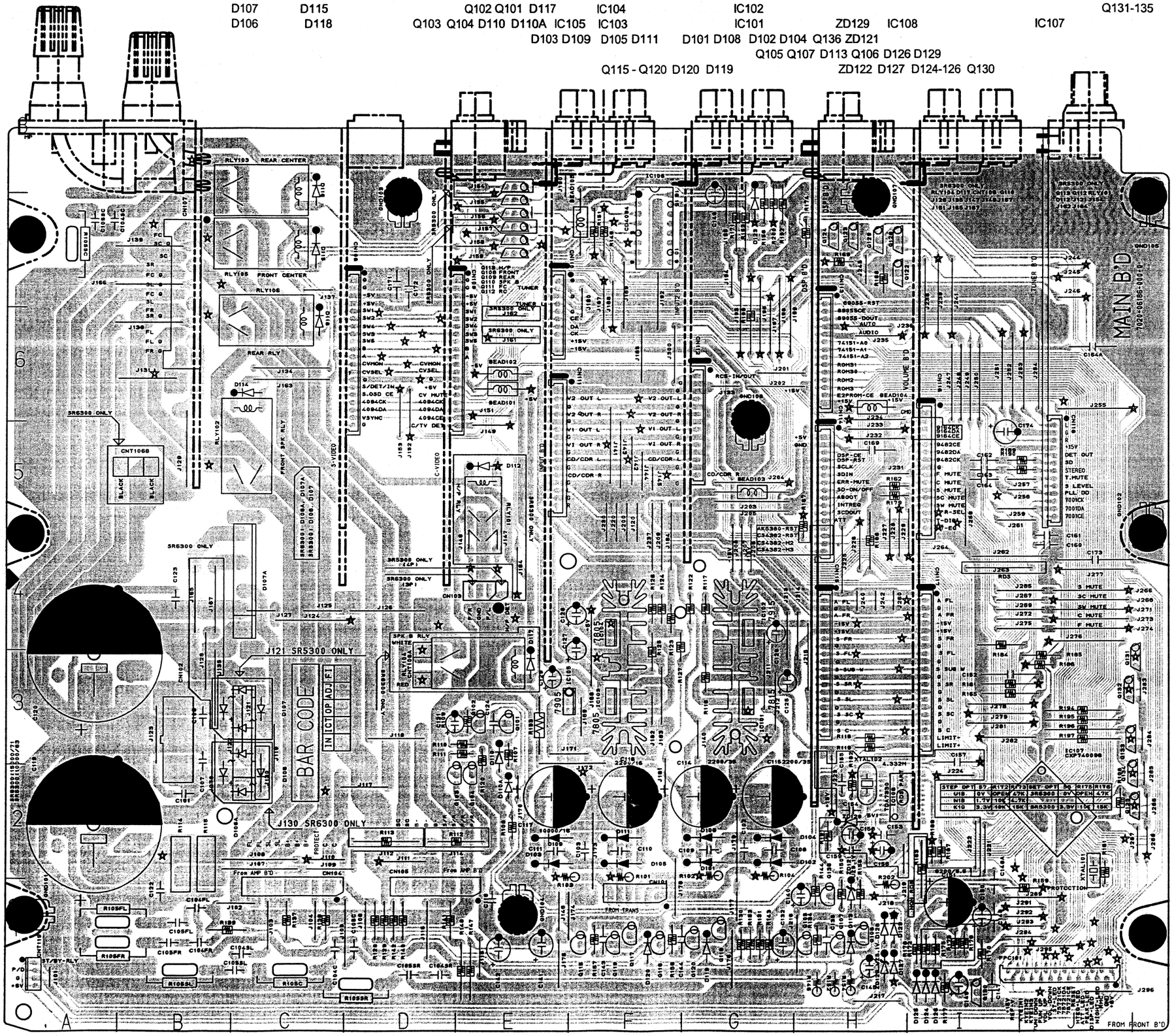

FRONT

Q301 IC301 D328 Q309 D317 Q302 D336 D337 D332 D333

D316M
D319 Q303M
D318 Q305
D320 Q304
D315 Q306
Q308

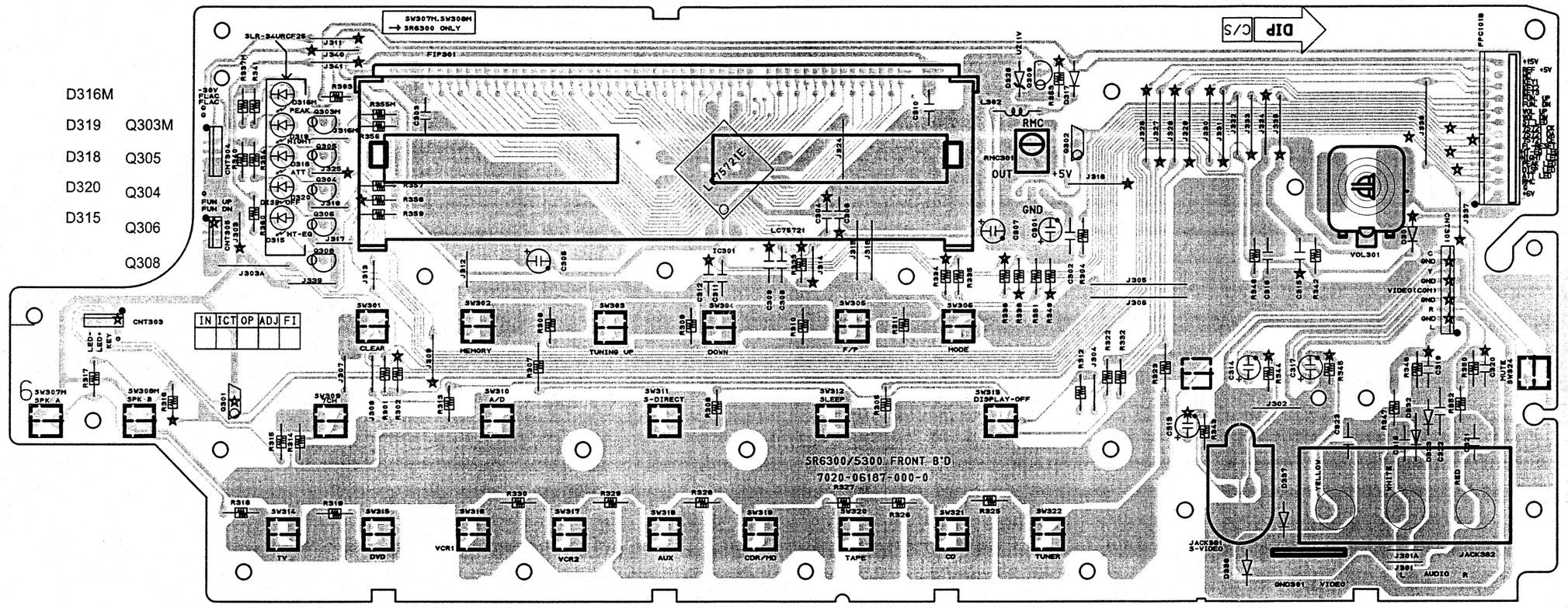

DSP

IC714 IC704
IC709 IC706 IC705
Q706-712 IC719-725 IC715 IC702 IC701
IC716 IC717 IC718 IC708 IC711 IC707

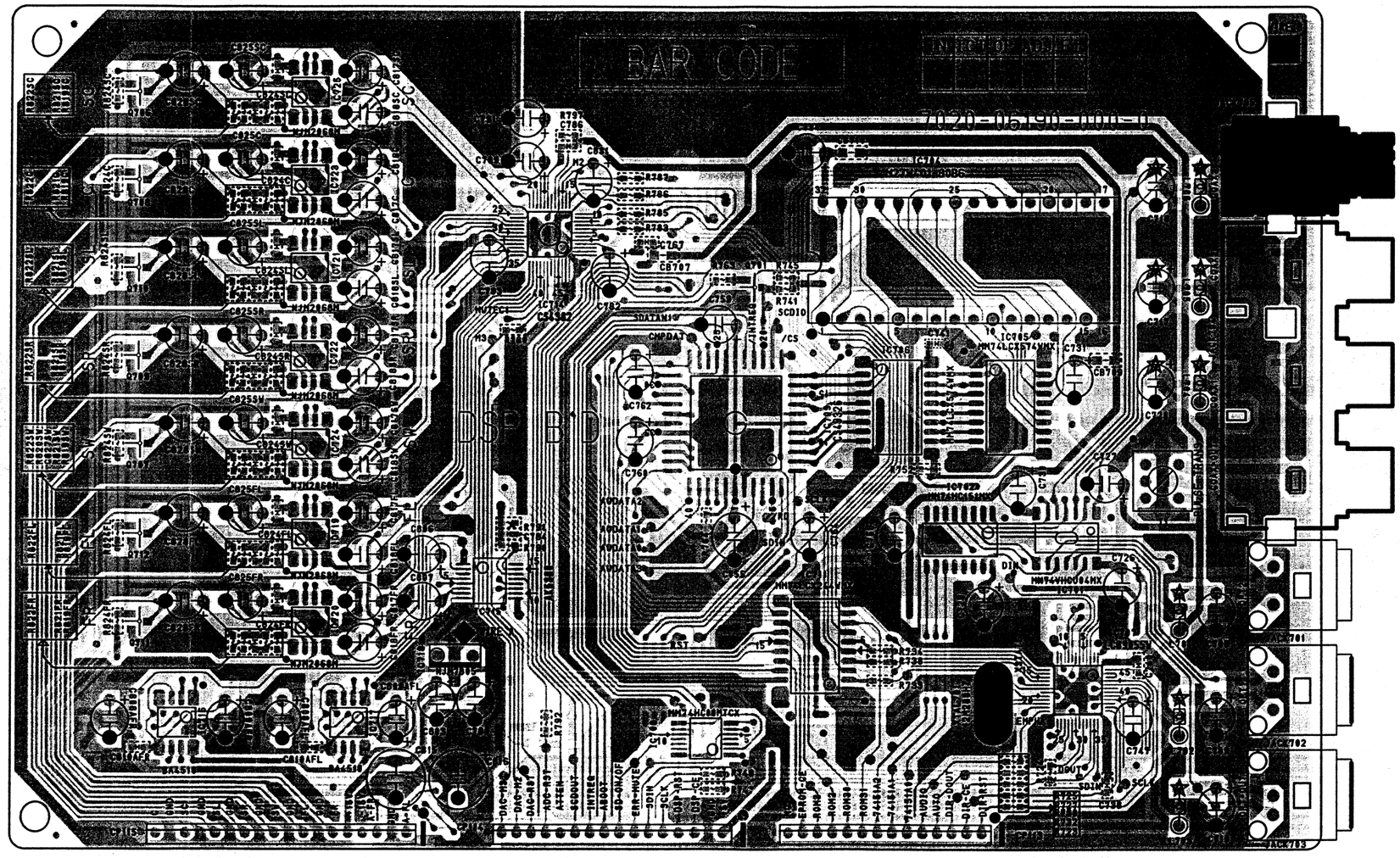

DSP

D701-703 IC703 IC710 IC713 IC712 D706 Q704 Q705 Q702 Q702AFL Q702AFR

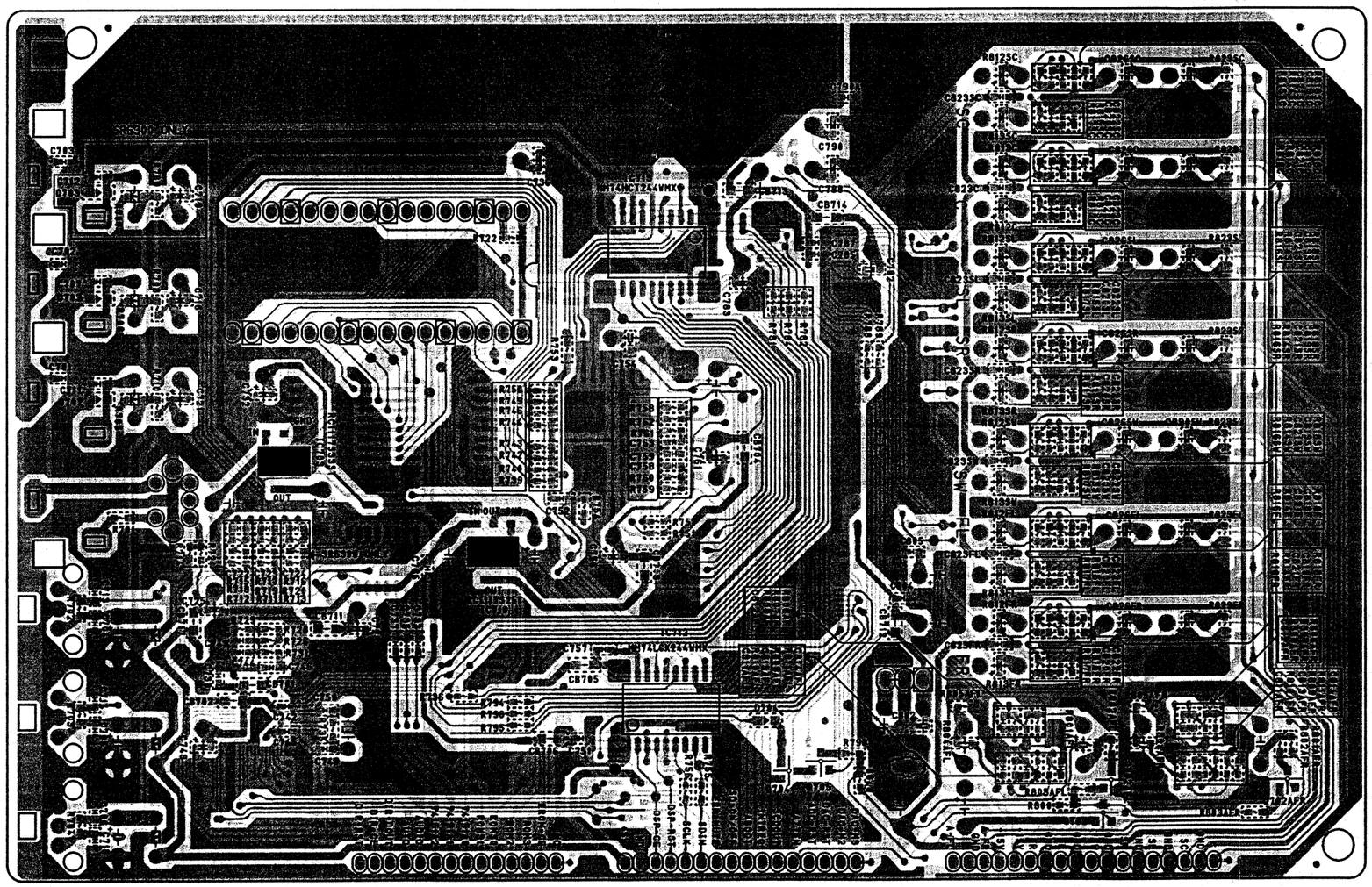

PROSESSOR [6.1CH(7CH)INPUT/OUTPUT]

Q515 D513 D508 IC503
D504 D502 D501 D506
D503 D507 D505 D510 D512
Q514 Q513 Q511 Q510 D509 D509
Q503 Q502 Q505 Q504 Q508 Q512 Q509
Q506 Q507 Q501

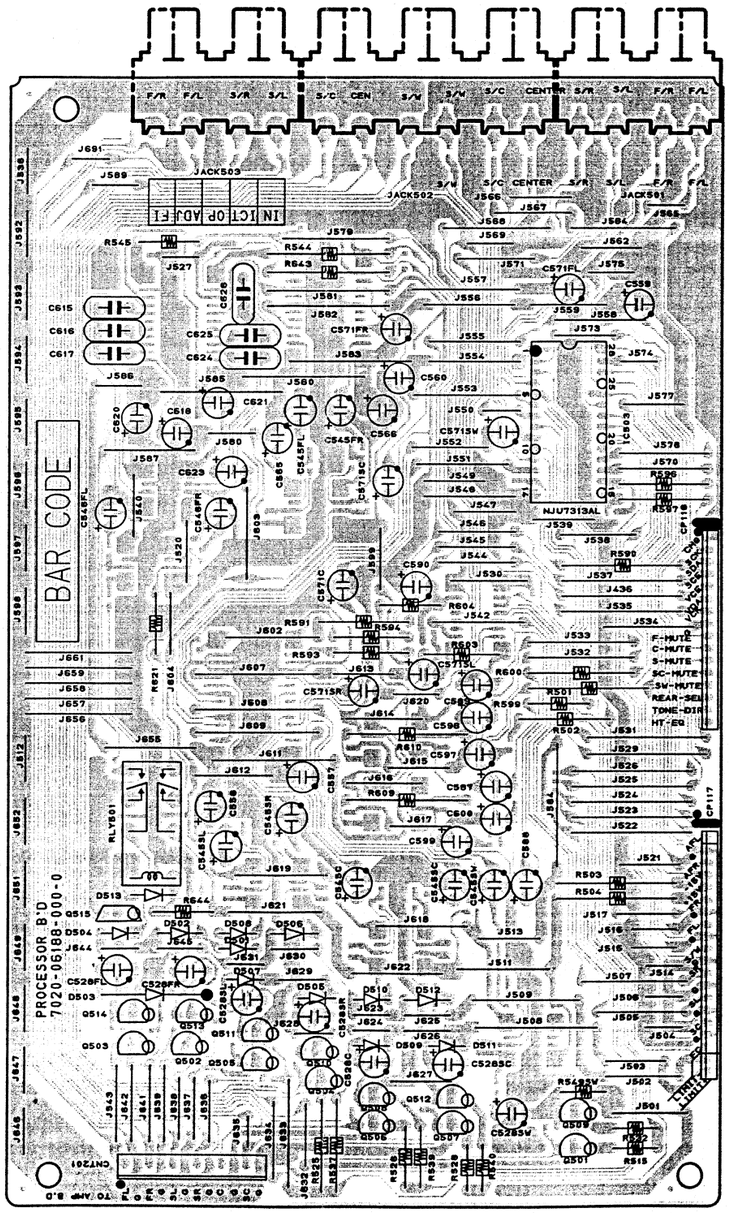

PROCESSOR [6.1CH(7CH)INPUT/OUTPUT]

IC501 IC504
IC505 IC506 IC512 IC514
IC510 IC511 IC502
IC509 IC508 IC507

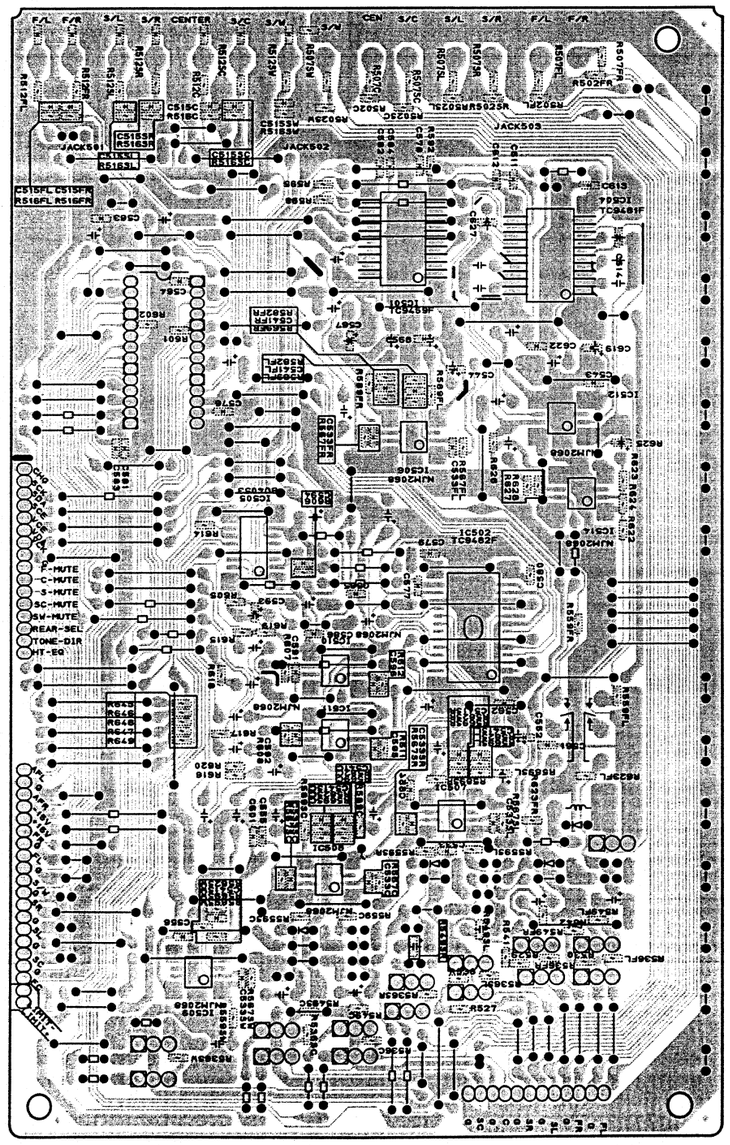

INPUT 1

IC403 IC404 IC401

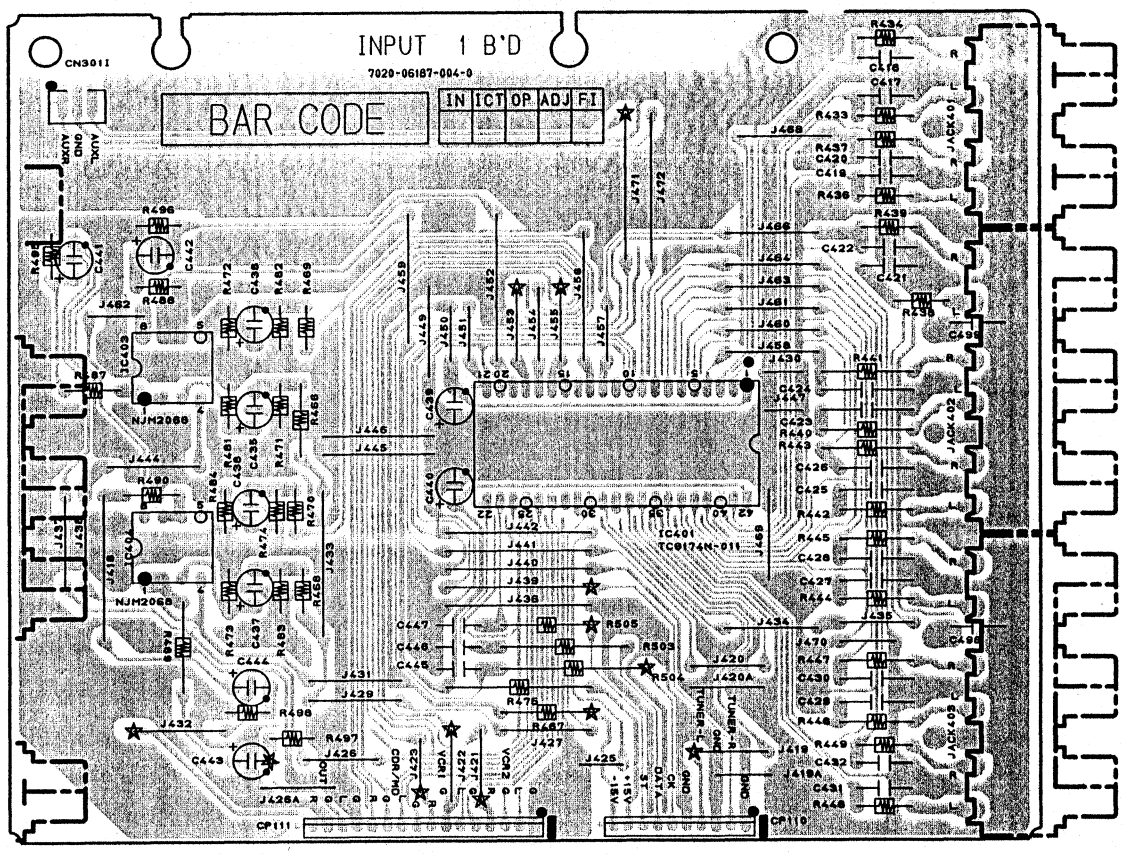

INPUT 2

D502 D501

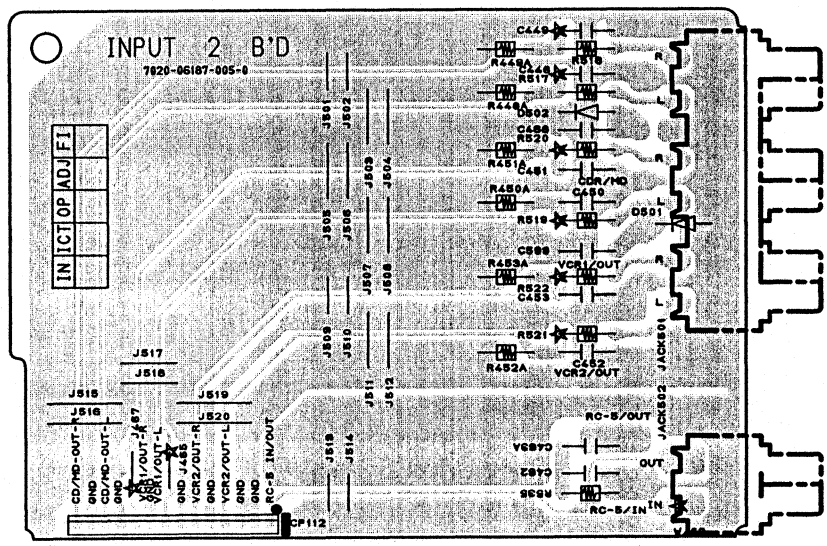

S-VIDEO

Q801A Q852A Q806
Q801 D801A D801 Q806A
IC806 IC805 D804 D802 Q852
Q808 Q805 Q851 Q854 Q803 Q816

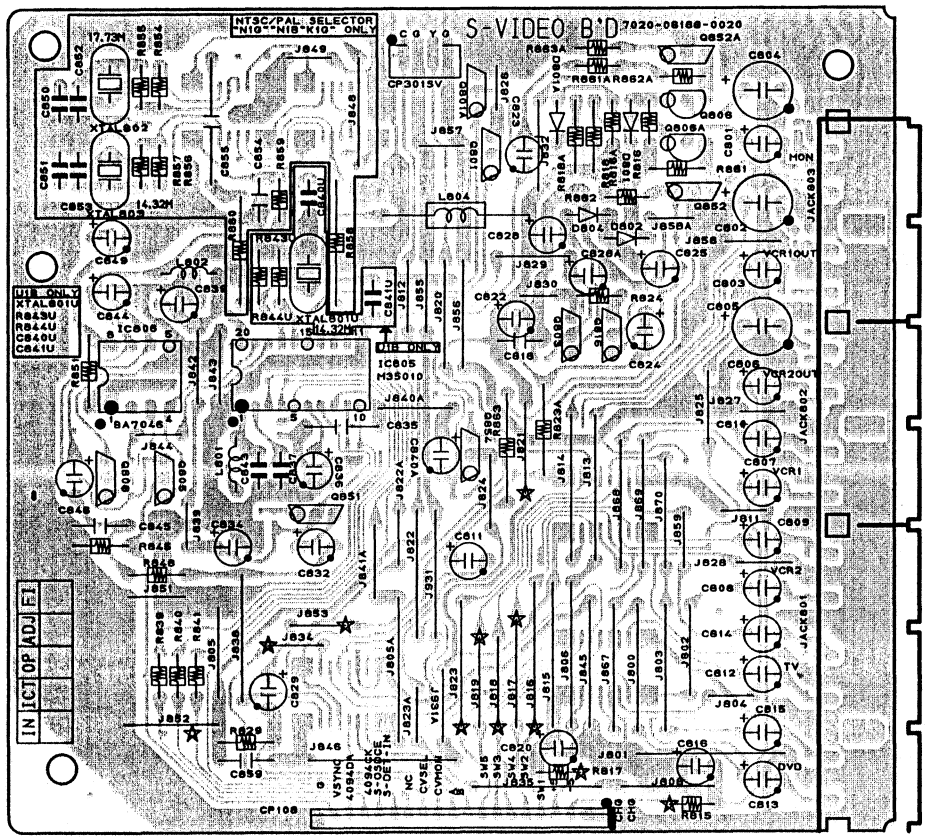

H/P (SR5300)

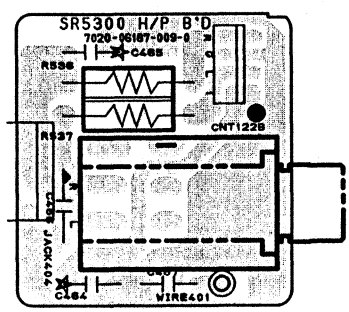

H/P (SR6300)

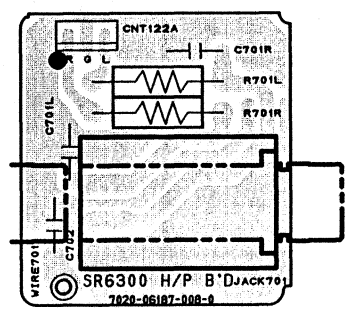

S-VIDEO

IC808 IC807

IC802 IC805 IC806

IC803 IC804

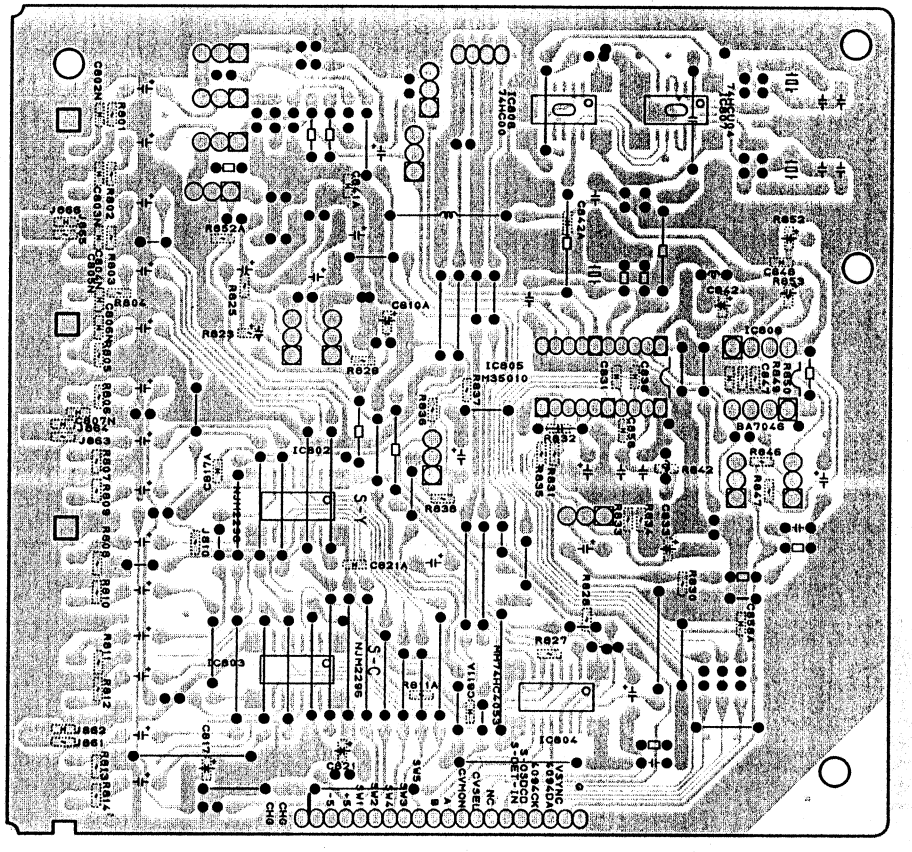

MULTI CONTROL

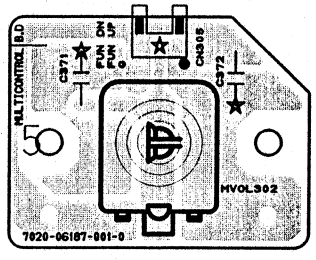

VIDEO

D871 Q870 D870 Q822
D872 D884 D873 Q822A
Q871 Q821

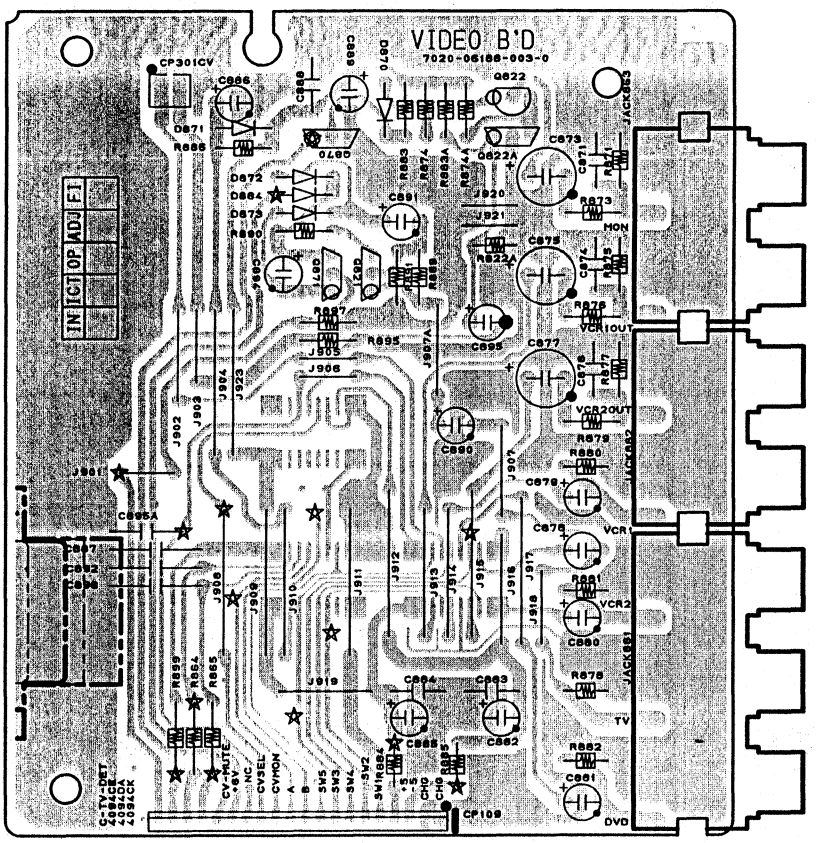

SPEAKER A

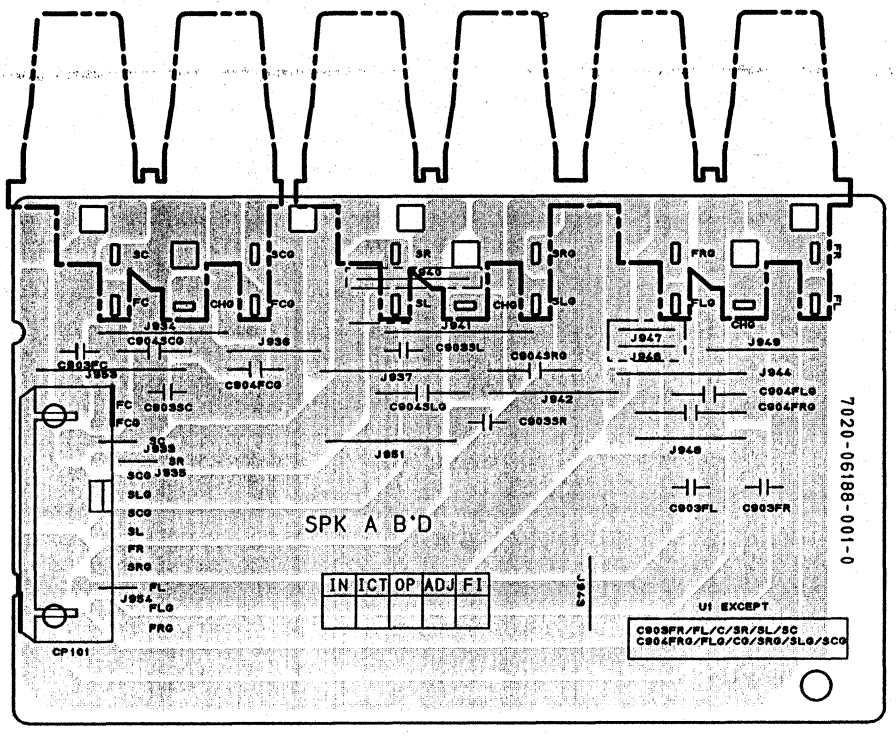

VIDEO

IC873

IC872 IC874

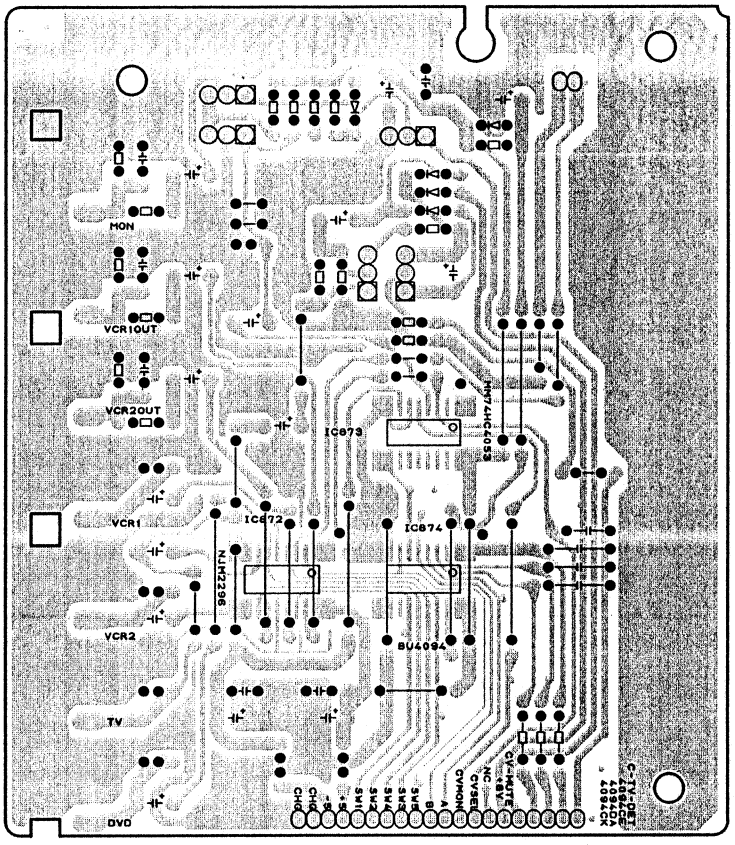

SPEAKER B (SR6300)

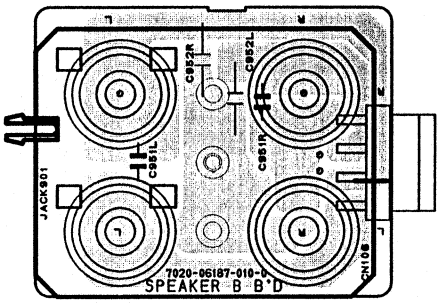

POWER

ZD712 ZD711 D711-714
ZD713 D714 IC710
Q712 ZD715 Q714 ZD716
D714 D719 Q711

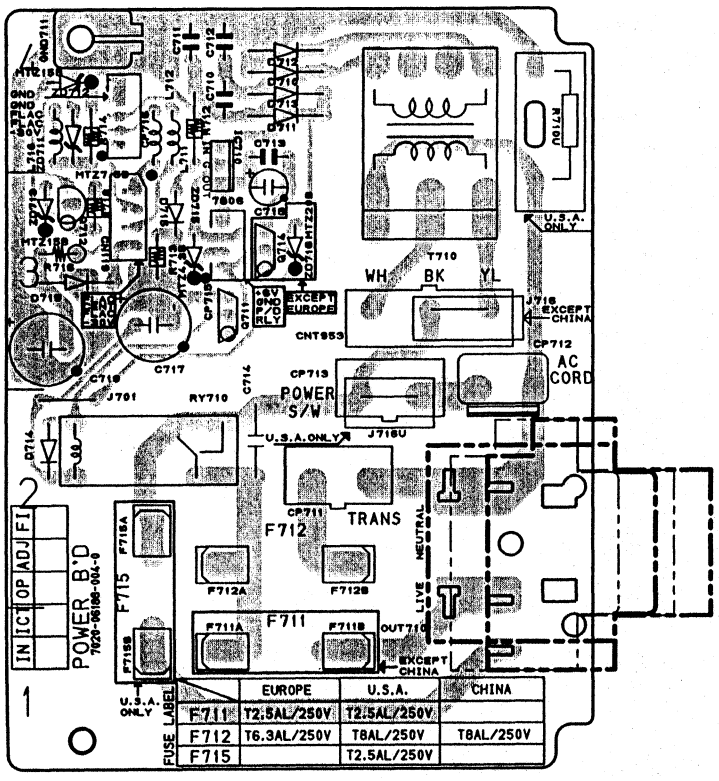

VOLTAGE SELECT (/K ONLY)

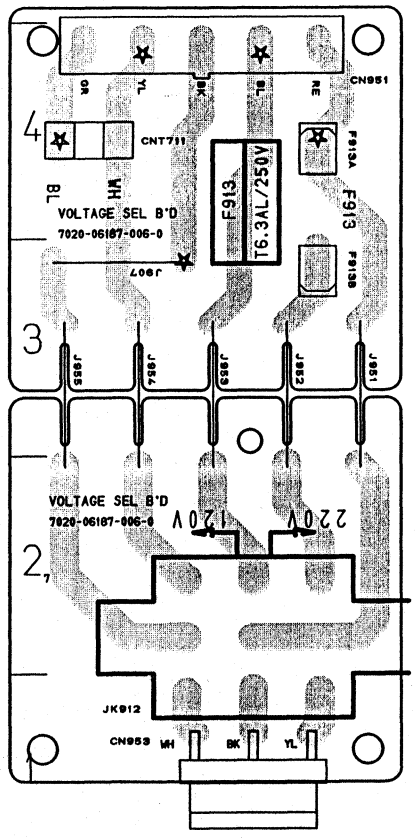

STAND-BY LED

D303

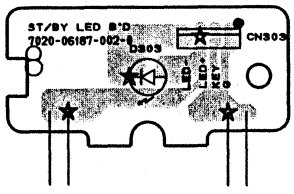

POWER SW (/A/K/N)

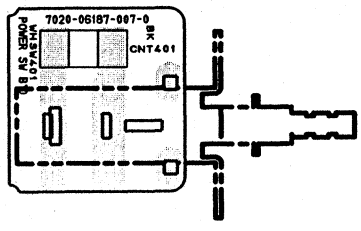

POWER SW (/U)

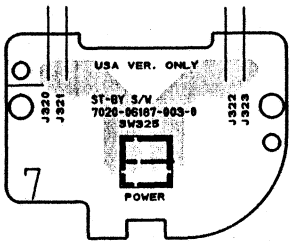

TUNER

To repair the tuner circuit board, replace the whole Tuner B'D A'ssy.
(Refer the Parts List.)

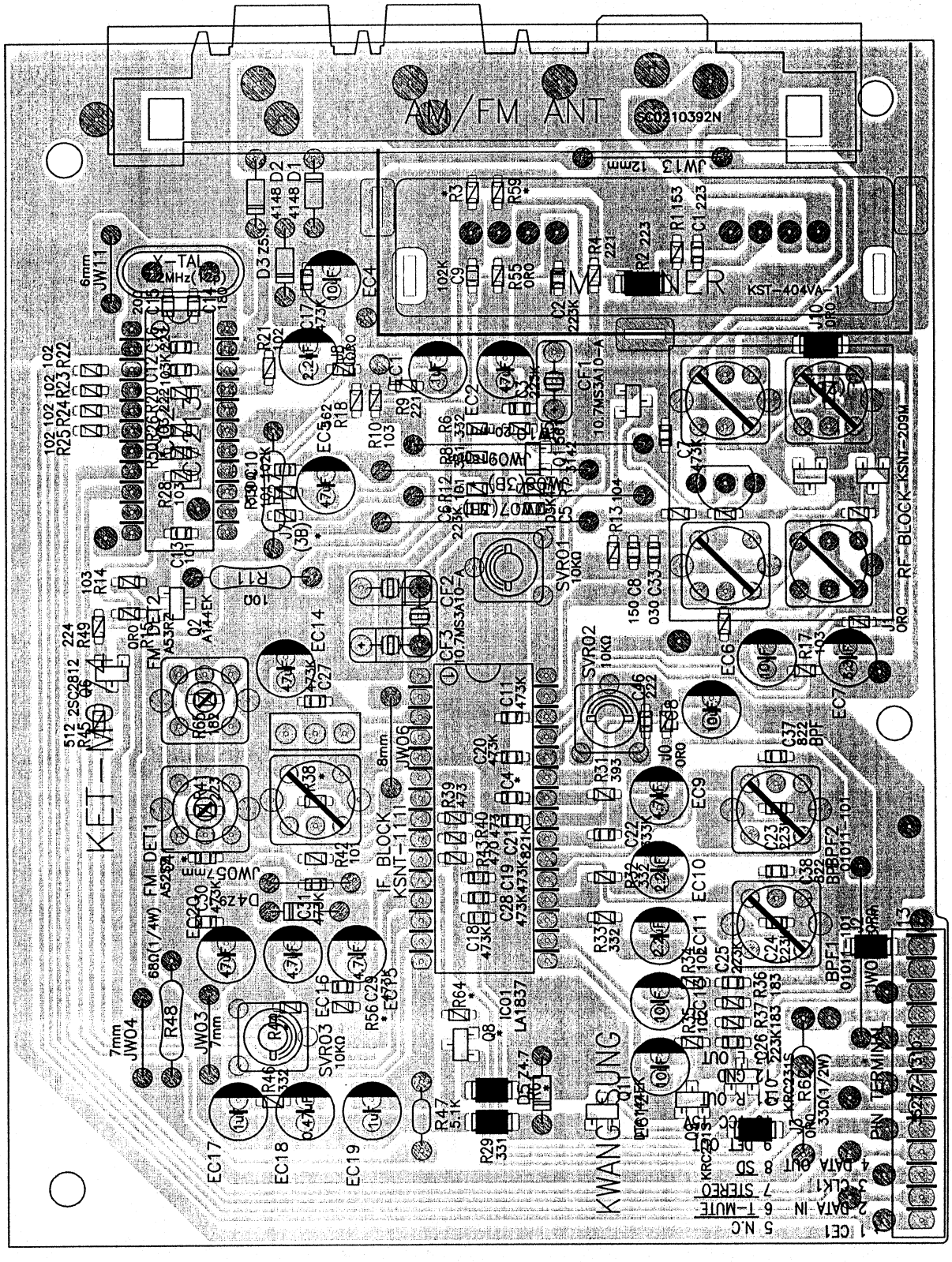

6. IC DATA

IC715:AK5380

Pin Assignment

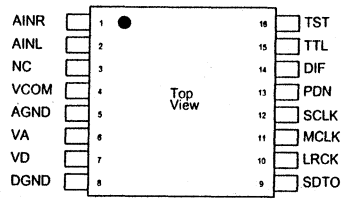

Pin Function

No.	Pin Name	I/O	Description
1	AINR	I	Rch Analog Input Pin
2	AINL	I	Lch Analog Input Pin
3	NC	-	NC Pin No internal bonding.
4	VCOM	O	Common Voltage Output Pin Normally connected to AGND with a 0.1 F ceramic capacitor in parallel with an electrolytic capacitor less than 2.2 F.
5	AGND	-	Analog Ground Pin, 0V
6	VA	-	Analog Power Supply Pin, +4.5 +5.5V
7	VD	-	Digital Power Supply Pin, +2.7 +5.5V(fs=48kHz), +4.5 +5.5V(fs=96kHz)
8	DGND	-	Digital Ground Pin, 0V
9	SDTO	O	Serial Data Output Pin Data bits are presented MSB first, in 2's complement format. This pin is "L " in the power-down mode.
10	LRCK	I	Left/Right Channel Select Pin The fs clock is input to this pin.
11	MCLK	I	Master Clock Input Pin
12	SCLK	I	Serial Data Input Pin Output data is clocked out on the falling edge of SCLK.
13	PDN	I	Power-Down Pin When "L ", the circuit is in power-down mode. The AK5380 should always be reset upon power-up.
14	DIF	I	Serial Interface Format Pin "L ": MSB justified, "H": I ^{2}S
15	TTL	I	Digital Input Level Select Pin "L ": CMOS level (VD=2.7 5.5V), "H": TTL level (VD=4.5 5.5V)
16	TST	I	Test Pin (Internal pull-down pin) This pin should be left open.

IC504:TC9481

Pin Function

PIN No	SYMBOL	PIN NAME	FUNCTION DESCRIPTION	REMARKS
1 (2)	V_{SS}	Negative power supply voltage terminals (Analog section)	• Power supply voltage terminals (Analog section)	—
20 (28)	V_{DD}	Positive power supply voltage terminals (Analog section)		
2 (3) 19 (26)	TONE-IN	Tone control input terminal	• Tone control volume circuit 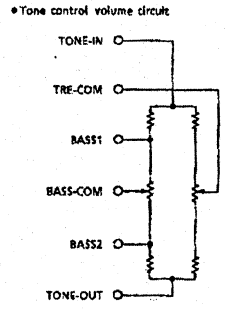	—
3 (4) 18 (25)	TRE-COM	Common terminal for tone control treble		
4 (5) 17 (24)	BASS1	Tap terminal for tone control bass		
5(6) 16 (23)	BASS-COM	Common terminal for tone control bass		
6 (9) 15 (20)	BASS2	Tap terminal 2 for tone control bass		
7(10) 14 (19)	TONE-OUT	Tone control output terminal		
8 (11) 13 (18)	CS1 CS2	Chip select input terminal	• Up to 4 chips on the same bus can be used by switching over chip select code.	—
9 (12)	GND	Digital GND terminal	• Digital GND terminal	—
10 (13)	CK	Clock input terminal	• Input terminal for transferring serial data	Low threshold For input use
11 (16)	DATA	Data input terminal	• Control data input terminal	
12 (17)	STB	Strobe input terminal	• Strobe input terminal for writting data	
(1) (7) (8) (14) (15) (21) (22) (28)	NC	Not connected	—	—

IC714:CS4382

Pin Assignment

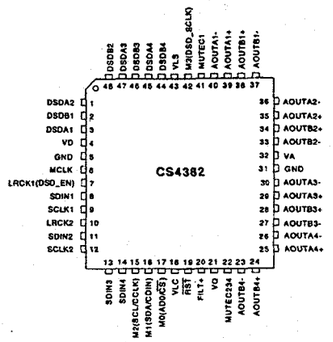

Pin Function

Pin Name	#	Pin Description
VD	4	**Digital Power** (*Input*) - Positive power supply for the digital section. Refer to the Recommended Operating Conditions for appropriate voltages.
GND	5 31	**Ground** (*Input*) - Ground reference. Should be connected to analog ground.
MCLK	6	**Master Clock** (*Input*) - Clock source for the delta-sigma modulator and digital filters. Table 5 illustrates several standard audio sample rates and the required master clock frequency.
LRCK1 **LRCK2**	7 10	**Left Right Clock** (*Input*) - Determines which channel, Left or Right, is currently active on the serial audio data line. The frequency of the left/right clock must be at the audio sample rate, Fs.
SDIN1 **SDIN2** **SDIN3** **SDIN4**	8 11 13 14	**Serial Audio Data Input** (*Input*) - Input for two's complement serial audio data.
SCLK1 **SCLK2**	9 12	**Serial Clock** (*Input*) - Serial clock for the serial audio interface.
VLC	18	**Control Port Power** (*Input*) - Determines the required signal level for the control port. Refer to the Recommended Operating Conditions for appropriate voltages.
$\overline{RST}$	19	**Reset** (*Input*) - The device enters a low power mode and all internal registers are reset to their default settings when low.
FILT+	20	**Positive Voltage Reference** (*Output*) - Positive reference voltage for the internal sampling circuits. Requires the capacitive decoupling to analog ground, as shown in the Typical Connection Diagram.
VQ	21	**Quiescent Voltage** (*Output*) - Filter connection for internal quiescent voltage. VQ must be capacitively coupled to analog ground, as shown in the Typical Connection Diagram. The nominal voltage level is specified in the Analog Characteristics and Specifications section. VQ presents an appreciable source impedance and any current drawn from this pin will alter device performance. However, VQ can be used to bias the analog circuitry assuming there is no AC signal component and the DC current is less than the maximum specified in the Analog Characteristics and Specifications section.

Pin Name	#	Pin Description
MUTEC1 **MUTEC234**	41 22	**Mute Control** (*Output*) - The Mute Control pins go high during power-up initialization, reset, muting, power-down or if the master clock to left/right clock frequency ratio is incorrect. These pins are intended to be used as a control for external mute circuits to prevent the clicks and pops that can occur in any single supply system. The use of external mute circuits are not mandatory but may be desired for designs requiring the absolute minimum in extraneous clicks and pops.
AOUTA1 +,- **AOUTB1 +,-** **AOUTA2 +,-** **AOUTB2 +,-** **AOUTA3 +,-** **AOUTB3 +,-** **AOUTA4 +,-** **AOUTB4 +,-**	39, 40 38, 37 35, 36 34, 33 29, 30 28, 27 25, 26 24, 23	**Differential Analog Output** (*Output*) - The full scale differential analog output level is specified in the Analog Characteristics specification table.
VA	32	**Analog Power** (*Input*) - Positive power supply for the analog section. Refer to the Recommended Operating Conditions for appropriate voltages.
VLS	43	**Serial Audio Interface Power** (*Input*) - Determines the required signal level for the serial audio interface. Refer to the Recommended Operating Conditions for appropriate voltages.
Control Port Definitions		
SCL/CCLK	15	**Serial Control Port Clock** (*Input*) - Serial clock for the serial control port. Requires an external pull-up resistor to the logic interface voltage in I^2C mode as shown in the Typical Connection Diagram.
SDA/CDIN	16	**Serial Control Data** (*Input/Output*) - SDA is a data I/O line in I^2C mode and requires an external pull-up resistor to the logic interface voltage, as shown in the Typical Connection Diagram. CDIN is the input data line for the control port interface in SPI mode.
AD0/$\overline{CS}$	17	**Address Bit 0 (I^2C) / Control Port Chip Select (SPI)** (*Input*) - AD0 is a chip address pin in I^2C mode; $\overline{CS}$ is the chip select signal for SPI format.
Stand-Alone Definitions		
M0	17	**Mode Selection** (*Input*) - Determines the operational mode of the device as detailed in Tables 6 and 7.
M1	16	
M2	15	
M3	42	
DSD Definitions		
DSD_SCLK	42	**DSD Serial Clock** (*Input*) - Serial clock for the Direct Stream Digital audio interface.
DSD_EN	7	**DSD-Enable** (*Input*) - When held at logic '1' the device will enter DSD mode (Stand-Alone mode only).
DSDA1	3	**Direct Stream Digital Input** (*Input*) - Input for Direct Stream Digital serial audio data.
DSDB1	2	
DSDA2	1	
DSDB2	48	
DSDA3	47	
DSDB3	46	
DSDA4	45	
DSDB4	44	

IC805:M35013

Pin Assignment

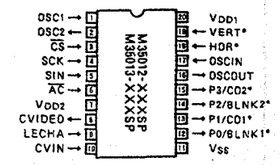

IC107:CXP740010

Pin Assignment

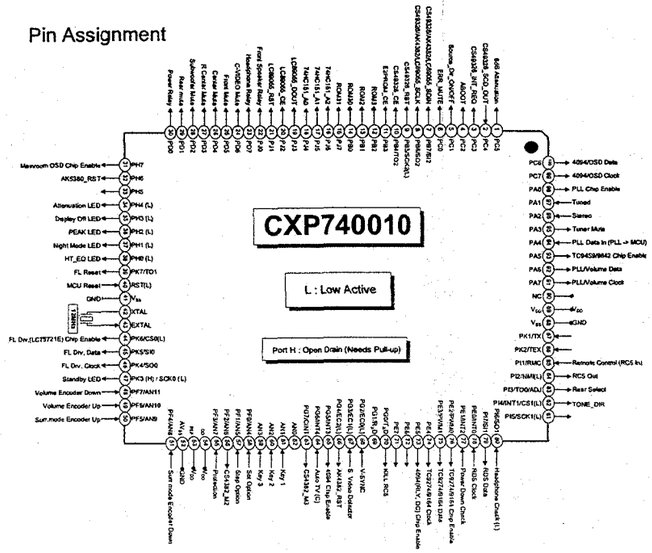

Pin Function

PIN NO	PIN NAME	opeation	description	ASSIGN
1	6dB ATT	Output for 6dB ATT		O
2	DSP SCD_OUT	INPUT Port for DSP SCD_OUTPUT Signal		I
3	DSP INT_REQ	Input for DSP Interrupt Request		O
4	ABOOT	Output for DSP AUTOBOOT		O
5	S-dir ON/OFF	MUTE	Mute Whenever Source direct key ON/OFF	O
6	ERR Mute	Output for DSP error mute	ACTIVE HIGH	O
7	DSP SDIN	DSP,DIR,DA Convertor SPI Serial Data INPUT		O
8	DSP SCLK	DSP,DIR,DA Convertor Control Signal Clock		O
9	DSP Reset	DSP Reset		O
10	DSP CE	DSP Chip Enable		O
11	E2PROM CE	E2PROM Chip Enable		O
12	ROM3	EPROM Address (Adrr.15)		O
13	ROM2	EPROM Address (Adrr.16)		O
14	ROM30	EPROM Address (Adrr.17)		O
15	ROM31	EPROM Address (Adrr.18)		O
16	74HC151_A2	MM74HC151 Select 0 (A2)	DIGITAL INPUT SELECT	O
17	74HC151_A1	MM74HC151 Select 0 (A1)	DIGITAL INPUT SELECT	O
18	74HC151_A0	MM74HC151 Select 0 (A0)	DIGITAL INPUT SELECT	O
19	Dir DOUT	LC89055 DATA OUTPUT		O
20	Dir CE	LC89055 Chip Enable		O
21	Dir RST	LC89055 RESET		O
22	F_SPK_RLY	Front Speaker Relay	FRONT SPEAKER RELAY ON/OFF	O
23	H/P RLY	HeadPhone Relay	HEADPHON RELAY ON/OFF	O
24	CV MUTE	C-VIDEO MUTE		O
25	Front Mute	Front Mute		O
26	Center Mute	Center Mute		O
27	R Center Mute	Rear Center Mute		O
28	Subwoofer Mute	Subwoofer Mute		O
29	H/P RLY	Output for "HEADPHONE RELAY ON/OFF"		O
30	Power Relay	POWER ON/OFF RELAY		O
31	Main OSD CE	Main OSD Chip Enable		O
32	DAC RST	AK5380 RESET		O
33				
34	ATT LED	Output to drive Attenuation LED	ACTIVE HIGH	O
35	Display Off LED	Output to drive Display off LED	ACTIVE HIGH	O
36	PEAK LED	Output to drive Peak Indication LED	ACTIVE HIGH	O
37	Night Mode LED	Output to drive Night Mode LED	ACTIVE HIGH	O
38	HT_EQ LED	Output to drive HT_EQ LED	ACTIVE HIGH	O
39	FL Reset	Output for resetting LC75721 FLT DRRVE IC		O
40	MCU Reset	Input for resetting the CPU	ACTIVE LOW	I
41	GND	Ground		O
42	XTAL	Output for 12MHz crystal oscillator		
43	EXTAL	Input for 12MHz crystal oscillator		O
44	FL Driv. CE	Output for chip enable of LC75721 FLT DRIVE IC		O
45	FL Driv. Data	Output for data of LC75721 FLT DRIVE IC		O
46	FL Driv. CLK	Output for clock of LC75721 FLT DRIVE IC		O
47	Standby LED	Output to drive standby LED		O
48	Vol.Encoder Down	Volume Encoder Down	Turning clockwise, volume is up	I
49	Vol.Encoder Up	Volume Encoder Up	Turning counterclockwise, volume is down	I
50	Surr.mode Encoder Up	Surround mode Selector Up		I

PIN NO	PIN NAME	opeation	description	ASSIGN
51	Surr.mode Encoder Down	Surround mode Selector Down		I
52	GND	Avss		
53	V_{ee}	Reference voltage(connected to +5V)	AV_{ss}	I
54	V_{ee}	+5V BACK UP	+5V power supply(AV_{DD})	I
55	Protection	Input for detecting "PROTECTION" condition	ACTIVE HIGH	I
56	CS4382_M2	Output for CS4382 Serial Control Clock		O
57	Step Option	Input for selecting the Gain	U18: 0V, N18: 1.7V, KIG: 3.3V	I
58	Set Option	Input for selecting the Set	SR6300 : 0V , SR5300 : 3.3V	I
59	Key3	Data input key scan	Check port for AD key input	I
60	Key2	Data input key scan	Check port for AD key input	I
61	Key1	Data input key scan	Check port for AD key input	I
62				
63	CS4382_M3	Serial clock for the Direct Stream Digital audio interface		O
64	Auto TV(C)	Input for detecting CVBS TV input signal	ACTIVE HIGH	I
65	4094 CE	Output for chip enable of BU4094 shift resistor		O
66	ADC_RST	A/D Convertor AK4382 RESET		O
67	S. Video Detector	Input for detecting S-VIDEO input signal	ACTIVE HIGH	I
68	V-SYNC	Input for detecting synchronization signal output from BA7046		I
69				
70	KILL RCS	Output for killing the remote control input	ACTIVE HIGH	O
71				
72				
73	4094(RLY,DC) CE	CD4094(RLY,DC0 Chip Enable		O
74	TC92749164 CLK	Switch IC TC92749164 CLOCK	Switch IC TC9274/NJU7313 CLOCK	O
75	TC92749164 Data	Switch IC TC92749164 DATA	Switch IC TC9274/NJU7313 DATA	O
76	TC92749164 CE	Switch IC TC92749164 Chip Enable	Switch IC TC9274/NJU7313 Chip Enable	O
77	Power Down Check	Input for power down		O
78	RDS Clock	Output for RDS clock of TDA7330		I
79	RDS Data	Output for RDS data of TDA7330		O
80	Headphone Check	Input for detecting the connection of Headphones	If LOW is detected, the surround mode is switched automatically to STEREO.	I
81				
82	TONE_Dir	Output for TONE DIRECT ON/OFF RELAY		O
83	R_SEL	Output for Rear channel selector IC BU4053		O
84	RC5 Out	Output for RC5 REMOCON signal		O
85	Remote Control	RC5 In		I
86	AUTO	Input for non-PCM burst data transfer detection signal		I
87	AUDIO	Input for channel status bit 1		I
88	GND	Ground		
89	Vcc	+5V power supply		
90	N.C			
91	PLL/Vol. CLK	Output for clock of LC75131 PLL IC and KIC9459, KIC9482 VOLUME IC		O
92	PLL/Vol. Data	Output for data of LC75131 PLL IC and KIC9459, KIC9482 VOLUME IC		O
93	TC9459/9482 CE	Output for chip enable of KIC9459, KIC9482 VOLUME IC		O
94	PLL Data in	Input for detecting "SCAN STOP" condition		I
96	PLL CE	Output for chip enable of LC72131 PLL IC		O
95	Tuner Mute	Output for TUNER MUTE ("L" condition is active)	ACTIVE LOW	O
96	Stereo	Input for detecting "STEREO" condition	If LOW is detected, STEREO flag is on.	I
97	Tuned	Input for detecting "TUNED" condition	If LOW is detected, TUNED flag is on.	I
99	4094/OSD CLK	Output for clock of BU4094, CD4094 SHIFT RESISTOR and M35010 OSD IC		O
100	4094/OSD Data	Output for data of BU4094, CD4094 SHIFT RESISTOR and M35010 OSD IC		O

7. EXPLODED VIEW AND PARTS LIST

SR5300

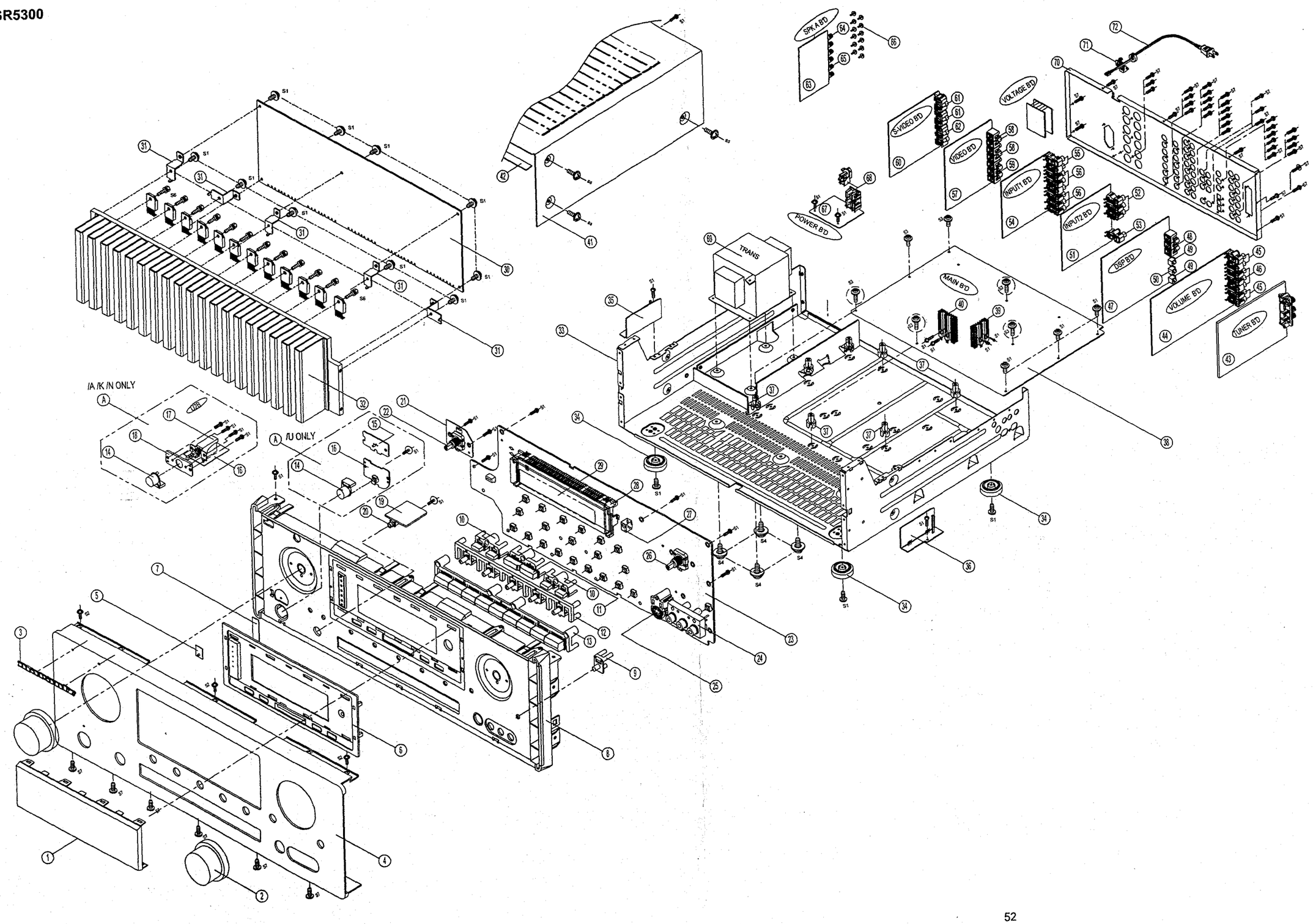

POS. NO	VERS. COLOR	PART NO. (FOR EUR)	PART NO. (MJI)	DESCRIPTION		
1		322W158040	322W158040	WINDOW	FL	5077210573040
2	GOLD	313W154510	313W154510	KNOB	VOLUME (GOLD)	5080210448010
2	BLACK	313W154500	313W154500	KNOB	VOLUME (BLACK)	5080210448000
3		168W251010	168W251010	BADGE	MARANTZ	563704097802A
4	/K	nsp	11AW248120	PANEL	FRONT AL(GOLD) FOR /K	3067210638240
4	/N	11AW248120	11AW248120	PANEL	FRONT AL(GOLD) FOR /N	3067210638230
4	/A/N	11AW248020	11AW248020	PANEL	FRONT AL(BLACK) FOR /A/N	3067210638220
4	/U	nsp	11AW248010	PANEL	FRONT AL(BLACK) FOR /U	3067210638210
5		322W355010	322W355010	INDICATOR	ACRYL MILK/LED	5160210063000
6	GOLD	322W053110	322W053110	DECORATION	CAP (GOLD)	5127210151010
6	BLACK	322W053010	322W053010	DECORATION	CAP (BLACK)	5127210151000
7		322W303010	322W303010	FILTER	COVER LED	5200210102000
8	GOLD	322W105120	322W105120	BODY	PANEL FRONT MOLD (GOLD)	3417210081010
8	BLACK	322W105020	322W105020	BODY	PANEL FRONT MOLD (BLACK)	3417210081000
9	GOLD	322W270140	322W270140	BUTTON	MUTE (GOLD)	5097211281010
9	BLACK	322W270040	322W270040	BUTTON	MUTE (BLACK)	5097211281000
10	GOLD	322W270130	322W270130	BUTTON	MODE F/P (GOLD)	5097211291010
10	BLACK	322W270030	322W270030	BUTTON	MODE F/P (BLACK)	5097211291000
11	GOLD	322W270120	322W270120	BUTTON	TUNING/PRESET (GOLD)	5097211301010
11	BLACK	322W270020	322W270020	BUTTON	TUNING/PRESET (BLACK)	5097211301000
12	GOLD	322W270150	322W270150	BUTTON	DIMMER/SLEEP etc (GOLD)	5097211311010
12	BLACK	322W270050	322W270050	BUTTON	DIMMER/SLEEP etc (BLACK)	5097211311000
13	GOLD	322W270160	322W270160	BUTTON	TV/DVD etc (GOLD)	5097211321010
13	BLACK	322W270060	322W270060	BUTTON	TV/DVD etc (BLACK)	5097211321000
14	GOLD	322W270110	322W270110	BUTTON	POWER (GOLD)	5097211271010
14	BLACK	322W270010	322W270010	BUTTON	POWER (BLACK)	5097211271000
15		nsp	nsp	P.C.B SUB ASSY	ST-BY LED	7028061873010
16	/U	nsp	nsp	P.C.B SUB ASSY	POWER SW FOR /U	7028061874010
16	/A/K/N	nsp	nsp	P.C.B SUB ASSY	POWER SW FOR /A/K/N	7028061878010
17	/A/K/N	*SP001160R	*SP001160R	SW PUSH	POWER SDDL-005-S	G000122006030
18	/A/K/N	nsp	nsp	BRACKET	POWER	4010210876000
19		nsp	nsp	P.C.B SUB ASSY	HEAD PHONE	702806187A010
20		*YT002550R	*YT002550R	JACK	HEADPHONE D6.5-9P	G402040221930
21		nsp	nsp	P.C.B SUB ASSY	M-CONTROL	7028061872010
22		*SR000190R	*SR000190R	SW ENCODER	EC16B12S00D4-ZZZ	G121161200010
23		nsp	nsp	P.C.B SUB ASSY	FRONT	7028061872010
24		*YT002830R	*YT002830R	TERMINAL	CINCH JACK RCA 3P	G606040320000
25		*YT002530R	*YT002530R	JACK	C40160250N / S-VIDEO 1P D6.5	G402041810000
26		*SR000200R	*SR000200R	SW ENCODER	EC16B24T01D4-ZZZ	G121162401400
27		*HW100630R	*HW100630R	REMOTE IR	RPM7136-H4 36.0KHZ IR SENSOR (RMC301)	E940713640000
28		nsp	nsp	HOLDER	FL-TUBE	4320210091010
29		*HQ300570R	*HQ300570R	DISPLAY FLT	HNA-15MM25 130*33.5 GRN,ORG (FIP301)	K530152500010
30		nsp	nsp	P.C.B SUB ASSY	AMP	7028061891020
31		nsp	nsp	BRACKET	HEATSINK	4010056906010
32		nsp	nsp	HEAT SINK	FOR POWER TR.	2120210308000
33		nsp	nsp	CHASSIS ASSY		3208210276300
34		322W057010	322W057010	FOOT	HOT STAMPING	4007040241030
35		nsp	nsp	P.C.B SUB ASSY	GUIDE LEFT	7028061886010
36		nsp	nsp	P.C.B SUB ASSY	GUIDE RIGHT	7028061887010
37		nsp	nsp	SPACER	MAIN PCB SUPPORT	4300040561010
38		nsp	nsp	P.C.B SUB ASSY	MAIN	7028061861040
39		nsp	nsp	HEAT SINK	46(W) X 60(H)	2120043538020
40		nsp	nsp	HEAT SINK	46(W) X 70(H)	2120043538050
41	GOLD	nsp	nsp	CABINET	TOP COVER (GOLD)	3007210076030
41	BLACK	nsp	nsp	CABINET	TOP COVER (BLACK)	3007210076010
42		nsp	nsp	CUSHION	BUFFER RS-717	4050045669010
43	/K	nsp	*AV000200R	TUNER BOARD ASSY	FM/AM KST-M9014MA1-7	E900901410040
43	/A/N	*AV000210R	*AV000210R	TUNER BOARD ASSY	FM/MW KST-M9014MA1-7	E900901410040
43	/U	nsp	*AV000220R	TUNER BOARD ASSY	FM/AM KST-M9014MA0-7	E900901400040
44		nsp	nsp	P.C.B SUB ASSY	VOLUME	7028061881010
45		*YT001600R	*YT001600R	TERMINAL	CINCH JACK / JK0400450N RCA 4PIN	G602040045000
46		*YT002650R	*YT002650R	TERMINAL	CINCH JACK / JK060046EN RCA 6PIN	G603600460050
47		nsp	nsp	P.C.B SUB ASSY	DSP	7028061901020
48		*YT002620R	*YT002620R	TERMINAL	CINCH JACK / JC030012ZN RCA 3PIN	G606300120040
49		*YT002570R	*YT002570R	MODULE	GP1FA502RZ / OPT. RX	E100150200020
50		*YT002580R	*YT002580R	MODULE	GP1FA502TZ / OPT. TX	E100150200030
51		nsp	nsp	P.C.B SUB ASSY	INPUT 2	7028061876010

NOTE : "nsp" PART IS LISTED FOR REFERENCE ONLY, MARANTZ WILL NOT SUPPLY THESE PARTS.

POS. NO	VERS. COLOR	PART NO. (FOR EUR)	PART NO. (MJI)	DESCRIPTION		
52		*YT002640R	*YT002640R	TERMINAL	CINCH JACK / JK060046CN RCA 6PIN	G603060046020
53		*YT002600R	*YT002600R	TERMINAL	CINCH JACK / JK020044HN RCA 2PIN	G601020044300
54		nsp	nsp	P.C.B SUB ASSY	INPUT1	7028061875010
55		*YT001600R	*YT001600R	TERMINAL	CINCH JACK / JK0400450N RCA 4PIN	G602040045000
56		*YT002640R	*YT002640R	TERMINAL	CINCH JACK / JK060046CN RCA 6PIN	G603060046020
57		nsp	nsp	P.C.B SUB ASSY	VIDEO	7028061884010
58		*YT002610R	*YT002610R	TERMINAL	CINCH JACK / JC0200095N RCA 2PIN	G601200092020
59		*YT002630R	*YT002630R	TERMINAL	CINCH JACK / JC030012FN RCA 3PIN	G606300125040
60		nsp	nsp	P.C.B SUB ASSY	S-VIDEO	7028061883010
61		*YT002540R	*YT002540R	JACK	YKF51-5516 / S-VIDEO 2P D6.5	G402042190000
62		*YT002560R	*YT002560R	JACK	YKF51-5512 / S-VIDEO 3P DIN	G403040010010
63		nsp	nsp	P.C.B SUB ASSY	P.C.B SUB ASSY SPEAKR	7028061882010
64		*YT001290R	*YT001290R	SPEAKER TERMINAL	BOARD SCREW 8P / SH0810360P	G61408103600A
65		*YT002590R	*YT002590R	SPEAKER TERMINAL	BOARD SCREW 4P / SH0410370P	G612041037320
66		nsp	nsp	BUSHING	FOR SPEAKER TERMINAL	2410040353010
67		nsp	nsp	P.C.B SUB ASSY	POWER	7028061885010
⚠ 68	/A/K/N	*YT002820R	*YT002820R	SOCKET	AC OUTLET YKE31-0090	G435040110000
⚠ 68	/U	nsp	*YT002810R	SOCKET	AC OUTLET CCT1304-0212	G435040070000
⚠ 69	/K	nsp	*TS001710R	TRANSFORMER	MAINS FOR /K	8200105600051
⚠ 69	/A/N	*TS001510R	*TS001510R	TRANSFORMER	MAINS FOR /A /N	8200105600061
⚠ 69	/U	nsp	*TS001720R	TRANSFORMER	MAINS FOR /U	8200105600042
70	/A	nsp	nsp	CHASSIS	REAR PANEL FOR SR5300/A1B	3207210726450
70	/K	nsp	nsp	CHASSIS	REAR PANEL FOR SR5300/K1G	3207210726240
70	/N1G	nsp	nsp	CHASSIS	REAR PANEL FOR SR5300/N1G	3207210726230
70	/N1B	nsp	nsp	CHASSIS	REAR PANEL FOR SR5300/N1B	3207210726220
70	/U	nsp	nsp	CHASSIS	REAR PANEL FOR SR5300/U1B	3207210726210
71	/U/K	nsp	323W259030	STOPPER	CORD HOLDER	4380040162010
⚠ 72	/K	nsp	*ZC000140R	CORD ASSY	MAINS WITH CORE FOR /K	L068000970030
⚠ 72	/U	nsp	*ZC000150R	CORD ASSY	MAINS WITH CORE FOR /U	L068020030080
S1		nsp	nsp	SCREW TAP TITE	+2S 3*8 B-TYPE ZNY/BH	B020030081B10
S2		nsp	nsp	SCREW TAP TITE	+2S 3*8 B-TYPE BK/FH	B020030083F10
S3		nsp	nsp	SCREW TAP TITE	3X18 B-TYPE ZNY/BH	B020030181B10
S4		nsp	nsp	SCREW TAP TITE ASSY	+3S 4*10 P+S-WASHER ZNY/BH	B028940101B10
S5		nsp	nsp	SCREW TAP TITE	+2S 4*8 B-TYPE Bsbm/BH	B020040086B10
S6		nsp	nsp	SCREW TAP TITE	+2S 3*16 P+S-WASHER ZNY/HH	1507041146010
S7		nsp	nsp	SCREW TAP TITE	+2S 3*10 B-TYPE(DOT)BH Bsbm	B020030106B11
S8		nsp	nsp	SCREW TAP TITE	+2S 3*8 ZNY WASHER	1500001456010
				PACKING		
-		ZK11AW0010	ZK11AW0010	REMOTE CONTROLLER	RC5300SR	8300110010010
⚠ -	/N	*ZC000230R	*ZC000230R	MAINS CORD	FOR /N	L061000000020
⚠ -	/A	nsp	*ZC000240R	MAINS CORD	FOR /A	L068020090020
-	/K	nsp	11AW851350	INSTRUCTION MANUAL	USER GUIDE FOR /K	5707210490070
-	/A/N	11AW851310	11AW851310	INSTRUCTION MANUAL	USER GUIDE FOR /A/N	5707210490060
-	/U	nsp	11AW851250	INSTRUCTION MANUAL	USER GUIDE FOR /U	5707210490050
				NOT STANDARD SPARE PARTS		
-	/A/N/U	nsp	nsp	PACKING CASE	FOR SR5300	6017210020210
-	/K	nsp	nsp	PACKING CASE	FOR SR5300/K	6017210020211
-	/U	nsp	nsp	CARD	WARRANTY (USA)	5777200120011
-	/U	nsp	nsp	CARD	WARRANTY (CANADA)	5777200120021
-	/N	nsp	nsp	CARD	IMPORTANT	5777200120051
-		nsp	nsp	CUSHION SNOW	R956(A) EPS WHITE	6230210134000
-		nsp	nsp	PE SHEET	FILM SOFT PE	6320040052010
-		nsp	nsp	ANTENNA	AM LOOP	E601010000000
-		nsp	nsp	ANTENNA	WIRE DIPOLE	E605010010000
-	/U	nsp	nsp	FM ANTENA ADAPTER	FOR USA	L109284007400
-	/A/K/N	nsp	nsp	FM ANTENA ADAPTER		L109284007300
-		nsp	nsp	BATTERY DRY	R03NE(1.5V)-AAA	G670011R50000

NOTE : "nsp" PART IS LISTED FOR REFERENCE ONLY, MARANTZ WILL NOT SUPPLY THESE PARTS.

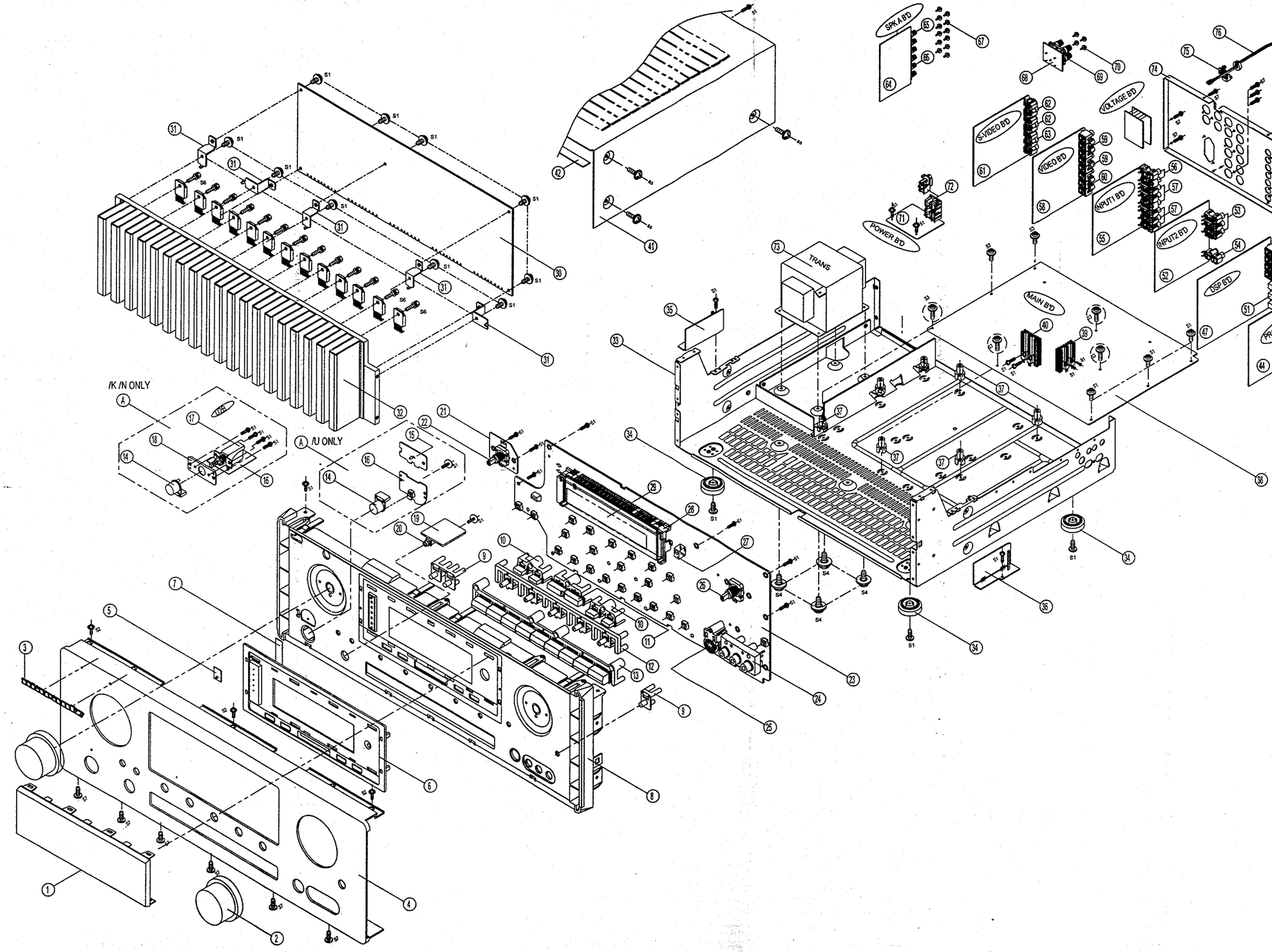
/K /N ONLY
/U ONLY
SPK A B'D
S/VIDEO B'D
VIDEO B'D
VOLTAGE B'D
INPUT1 B'D
INPUT2 B'D
DSP B'D
PROCESSOR B'D
TUNER B'D
POWER B'D
MAIN B'D
TRANS

SR6300

POS. NO	VERS. COLOR	PART NO. (FOR EUR)	PART NO. (MJI)	DESCRIPTION		
1		322W158040	322W158040	WINDOW	FL	5077210573040
2	GOLD	313W154510	313W154510	KNOB	VOLUME (GOLD)	5080210448010
2	BLACK	313W154500	313W154500	KNOB	VOLUME (BLACK)	5080210448000
3		168W251010	168W251010	BADGE	MARANTZ	563704097802A
4	/K	nsp	15AW248120	PANEL	FRONT AL(GOLD) FOR /K	3067210638040
4	/N1G	15AW248120	15AW248120	PANEL	FRONT AL(GOLD) FOR /N	3067210638030
4	/N1B	15AW248020	15AW248020	PANEL	FRONT AL(BLACK) FOR /N	3067210638020
4	/U	nsp	15AW248010	PANEL	FRONT AL(BLACK) FOR /U	3067210638010
5		322W355010	322W355010	INDICATOR	ACRYL MILK/LED	5160210063000
6	GOLD	322W053110	322W053110	DECORATION	CAP (GOLD)	5127210151010
6	BLACK	322W053010	322W053010	DECORATION	CAP (BLACK)	5127210151000
7		322W303010	322W303010	FILTER	COVER LED	5200210102000
8	GOLD	322W105120	322W105120	BODY	PANEL FRONT MOLD (GOLD)	3417210081010
8	BLACK	322W105020	322W105020	BODY	PANEL FRONT MOLD (BLACK)	3417210081000
9	GOLD	322W270140	322W270140	BUTTON	MUTE/SPEAKERS A B (GOLD)	5097211281010
9	BLACK	322W270040	322W270040	BUTTON	MUTE/SPEAKERS A B (BLACK)	5097211281000
10	GOLD	322W270130	322W270130	BUTTON	MODE F/P (GOLD)	5097211291010
10	BLACK	322W270030	322W270030	BUTTON	MODE F/P (BLACK)	5097211291000
11	GOLD	322W270120	322W270120	BUTTON	TUNING/PRESET (GOLD)	5097211301010
11	BLACK	322W270020	322W270020	BUTTON	TUNING/PRESET (BLACK)	5097211301000
12	GOLD	322W270150	322W270150	BUTTON	DIMMER/SLEEP etc (GOLD)	5097211311010
12	BLACK	322W270050	322W270050	BUTTON	DIMMER/SLEEP etc (BLACK)	5097211311000
13	GOLD	322W270160	322W270160	BUTTON	TV/DVD etc (GOLD)	5097211321010
13	BLACK	322W270060	322W270060	BUTTON	TV/DVD etc (BLACK)	5097211321000
14	GOLD	322W270110	322W270110	BUTTON	POWER (GOLD)	5097211271010
14	BLACK	322W270010	322W270010	BUTTON	POWER (BLACK)	5097211271000
15		nsp	nsp	P.C.B SUB ASSY	ST-BY LED	7028061873010
16	/U	nsp	nsp	P.C.B SUB ASSY	POWER SW FOR /U	7028061874010
16	/K/N	nsp	nsp	P.C.B SUB ASSY	POWER SW FOR /K/N	7028061878010
17	/K/N	*SP001160R	*SP001160R	SW PUSH	POWER SDDL-005-S	G000122006030
18	/K/N	nsp	nsp	BRACKET	POWER	4010210876000
19	/K/N	nsp	nsp	P.C.B SUB ASSY	HEAD PHONE	7028060774010
19	/U	nsp	nsp	P.C.B SUB ASSY	HEAD PHONE	7028061879010
20		*YT002550R	*YT002550R	JACK	HEADPHONE D6.5-9P	G402040221930
21		nsp	nsp	P.C.B SUB ASSY	M-CONTROL	7028061872010
22		*SR000190R	*SR000190R	SW ENCODER	EC16B12S00D4-ZZZ	G121161200010
23		nsp	nsp	P.C.B SUB ASSY	FRONT	7028061871010
24		*YT002830R	*YT002830R	TERMINAL	CINCH JACK RCA 3P	G606040320000
25		*YT002530R	*YT002530R	JACK	C40160250N / S-VIDEO 1P D6.5	G402041810000
26		*SR000200R	*SR000200R	SW ENCODER	EC16B24T01D4-ZZZ	G121162401400
27		*HW100630R	*HW100630R	REMOTE IR	RPM7136-H4 36.0KHZ IR SENSOR (RMC301)	E940713640000
28		nsp	nsp	HOLDER	FL-TUBE	4320210091010
29		*HQ300570R	*HQ300570R	DISPLAY FLT	HNA-15MM25 130*33.5 GRN,ORG (FIP301)	K530152500010
30		nsp	nsp	P.C.B SUB ASSY	AMP	7028061891010
31		nsp	nsp	BRACKET	HEATSINK	4010056906010
32		nsp	nsp	HEAT SINK	FOR POWER TR.	2120210278000
33		nsp	nsp	CHASSIS ASSY		3208210276300
34		322W057010	322W057010	FOOT	HOT STAMPING	4007040241030
35		nsp	nsp	P.C.B SUB ASSY	GUIDE LEFT	7028061886010
36		nsp	nsp	P.C.B SUB ASSY	GUIDE RIGHT	7028061887010
37		nsp	nsp	SPACER	MAIN PCB SUPPORT	4300040561010
38		nsp	nsp	P.C.B SUB ASSY	MAIN	7028061861010
39		nsp	nsp	HEAT SINK	46(W) X 60(H)	2120043538020
40		nsp	nsp	HEAT SINK	46(W) X 70(H)	2120043538050
41	GOLD	nsp	nsp	CABINET	TOP COVER (GOLD)	3007210076030
41	BLACK	nsp	nsp	CABINET	TOP COVER (BLACK)	3007210076010
42		nsp	nsp	CUSHION	BUFFER RS-717	4050045669010
43	/K	nsp	*AV000200R	TUNER BOARD ASSY	FM/AM KST-M9014MA1-7	E900901410040
43	/N	*AV000210R	*AV000210R	TUNER BOARD ASSY	FM/MW KST-M9014MA1-7	E900901410040
43	/U	nsp	*AV000220R	TUNER BOARD ASSY	FM/AM KST-M9014MA0-7	E900901400040
44		nsp	nsp	P.C.B SUB ASSY	VOLUME	7028061881010
45		*YT001600R	*YT001600R	TERMINAL	CINCH JACK / JK0400450N RCA 4PIN	G602040045000
46		*YT002650R	*YT002650R	TERMINAL	CINCH JACK / JK060046EN RCA 6PIN	G603600460050
47		nsp	nsp	P.C.B SUB ASSY	DSP	7028061901010
48		*YT002730R	*YT002730R	TERMINAL	CINCH JACK RCA 2PIN	G601200099060
49		*YT002720R	*YT002720R	TERMINAL	CINCH JACK RCA 2PIN	G601200099070
50		*YT002570R	*YT002570R	MODULE	GP1FA502RZ / OPT. RX	E100150200020

NOTE : "nsp" PART IS LISTED FOR REFERENCE ONLY, MARANTZ WILL NOT SUPPLY THESE PARTS.

SR6300

POS. NO	VERS. COLOR	PART NO. (FOR EUR)	PART NO. (MJI)	DESCRIPTION		
51		*YT002580R	*YT002580R	MODULE	GP1FA502TZ / OPT. TX	E100150200030
52		nsp	nsp	P.C.B SUB ASSY	INPUT 2	7028061876010
53		*YT002640R	*YT002640R	TERMINAL	CINCH JACK / JK060046CN RCA 6PIN	G603060046020
54		*YT002600R	*YT002600R	TERMINAL	CINCH JACK / JK020044HN RCA 2PIN	G601020044300
55		nsp	nsp	P.C.B SUB ASSY	INPUT1	7028061875010
56		*YT001600R	*YT001600R	TERMINAL	CINCH JACK / JK0400450N RCA 4PIN	G602040045000
57		*YT002640R	*YT002640R	TERMINAL	CINCH JACK / JK060046CN RCA 6PIN	G603060046020
58		nsp	nsp	P.C.B SUB ASSY	VIDEO	7028061884010
59		*YT002610R	*YT002610R	TERMINAL	CINCH JACK / JC0200095N RCA 2PIN	G601200092020
60		*YT002630R	*YT002630R	TERMINAL	CINCH JACK / JC030012FN RCA 3PIN	G606300125040
61		nsp	nsp	P.C.B SUB ASSY	S-VIDEO	7028061883010
62		*YT002540R	*YT002540R	JACK	YKF51-5516 / S-VIDEO 2P D6.5	G402042190000
63		*YT002560R	*YT002560R	JACK	YKF51-5512 / S-VIDEO 3P DIN	G403040010010
64		nsp	nsp	P.C.B SUB ASSY	SPEAKR	7028061882010
65		*YT001290R	*YT001290R	SPEAKER TERMINAL	BOARD SCREW 8P / SH0810360P	G614081036000A
66		*YT002590R	*YT002590R	SPEAKER TERMINAL	BOARD SCREW 4P / SH0410370P	G612041037320
67		nsp	nsp	BUSHING	FOR SPEAKER TERMINAL	2410040353010
68		nsp	nsp	P.C.B SUB ASSY	SPEAKR B	7028061885010
69		*YT002780R	*YT002780R	TER BOARD SCREW 4P	SPEAKER TERMINAL/SH0410770P	G612040290000
70		nsp	nsp	BUSHING	FOR SPEAKER TERMINAL	2410040353010
71		nsp	nsp	P.C.B SUB ASSY	POWER	7028061885010
⚠ 72	/K/N	*YT002820R	*YT002820R	SOCKET	AC OUTLET YKE31-0090	G435040110000
⚠ 72	/U	nsp	*YT002810R	SOCKET	AC OUTLET CCT1304-0212	G435040070000
⚠ 73	/K	nsp	*TS001730R	TRANSFORMER	MAINS FOR /K	8200111710140
⚠ 73	/N	*TS001740R	*TS001740R	TRANSFORMER	MAINS FOR /N	8200111710130
⚠ 73	/U	nsp	*TS001750R	TRANSFORMER	MAINS FOR /U	8200111710120
74	/K	nsp	nsp	CHASSIS	REAR PANEL FOR SR6300/K1G	3207210726340
74	/N1G	nsp	nsp	CHASSIS	REAR PANEL FOR SR6300/N1G	3207210726330
74	/N1B	nsp	nsp	CHASSIS	REAR PANEL FOR SR6300/N1B	3207210726320
74	/U	nsp	nsp	CHASSIS	REAR PANEL FOR SR6300/U1B	3208210276310
75	/U/K	nsp	323W259030	STOPPER	CORD HOLDER	4380040162010
⚠ 72	/K	nsp	*ZC000140R	CORD ASSY	MAINS WITH CORE FOR K	L068000970030
⚠ 72	/U	nsp	*ZC000150R	CORD ASSY	MAINS WITH CORE FOR U	L068020030080
S1		nsp	nsp	SCREW TAP TITE	+2S 3*8 B-TYPE ZNY/BH	B020030081B10
S2		nsp	nsp	SCREW TAP TITE	+2S 3*8 B-TYPE BK/FH	B020030083F10
S3		nsp	nsp	SCREW TAP TITE	3X18 B-TYPE ZNY/BH	B020030181B10
S4		nsp	nsp	SCREW TAP TITE ASSY	+3S 4*10 P+S-WASHER ZNY/BH	B028940101B10
S5		nsp	nsp	SCREW TAP TITE	+2S 4*8 B-TYPE Bsbm/BH	B020040086B10
S6		nsp	nsp	SCREW TAP TITE	+2S 3*16 P+S-WASHER ZNY/HH	1507041146010
S7		nsp	nsp	SCREW TAP TITE	+2S 3*10 B-TYPE(DOT)BH Bsbm	B020030106B11
S8		nsp	nsp	SCREW TAP TITE	+2S 3*8 ZNY WASHER	1500001456010
				PACKING		
-		ZK15AW0010	ZK15AW0010	REMOTE CONTROLLER	RC7300SR	8300030010010
⚠ -	/N	*ZC000230R	*ZC000230R	MAINS CORD	FOR /N	L061000000020
-	/K	nsp	15AW851350	INSTRUCTION MANUAL	USER GUIDE FOR /K	5707210480060
-	/N	15AW851310	15AW851310	INSTRUCTION MANUAL	USER GUIDE FOR /N	5707210480050
-	/U	nsp	15AW851250	INSTRUCTION MANUAL	USER GUIDE FOR /U	5707210480040
				NOT STANDARD SPARE PARTS		
-	/N/U	nsp	nsp	PACKING CASE	FOR SR6300	6017210020200
-	/K	nsp	nsp	PACKING CASE	FOR SR6300 /K	6017210020201
-	/U	nsp	nsp	CARD	WARRANTY (USA)	5777200120011
-	/U	nsp	nsp	CARD	WARRANTY (CANADA)	5777200120021
-	/N	nsp	nsp	CARD	IMPORTANT	5777200120051
-		nsp	nsp	CUSHION SNOW	R956(A) EPS WHITE	6230210134000
-		nsp	nsp	PE SHEET	FILM SOFT PE	6320040052010
-		nsp	nsp	ANTENNA	AM LOOP	E601010000000
-		nsp	nsp	ANTENNA	WIRE DIPOLE	E605010010000
-	/U	nsp	nsp	FM ANTENA ADAPTER	FOR /U	L109284007400
-	/K/N	nsp	nsp	FM ANTENA ADAPTER	FOR /K/N	L109284007300
-		nsp	nsp	BATTERY DRY	LR6(1.5V)AA	G670001R50010

NOTE : "nsp" PART IS LISTED FOR REFERENCE ONLY, MARANTZ WILL NOT SUPPLY THESE PARTS.

8. SERVICE PROCEDURE

MICRO-COMPUTER

To check the microcomputer firmware version, press **6.1 CH IN** button and **SLEEP** button simultaneously while power is on. The version number is shown on the main display of the unit.

Ex. V 020716 01

TUNER

1. Requried Equipments

- AM Standard Signal Generator (AM SSG)
- Oscilloscope
- AC Voltmeter
- FM Standard Signal Generator (FM SSG)
- Stereo Modulator
- Audio Generator
- Distortion Meter
- DC Voltmeter
- Frequency Counter

Note : Disconnect external FM antenna prior to alignment.

2. Alignment

2-1. Alignment Test Points

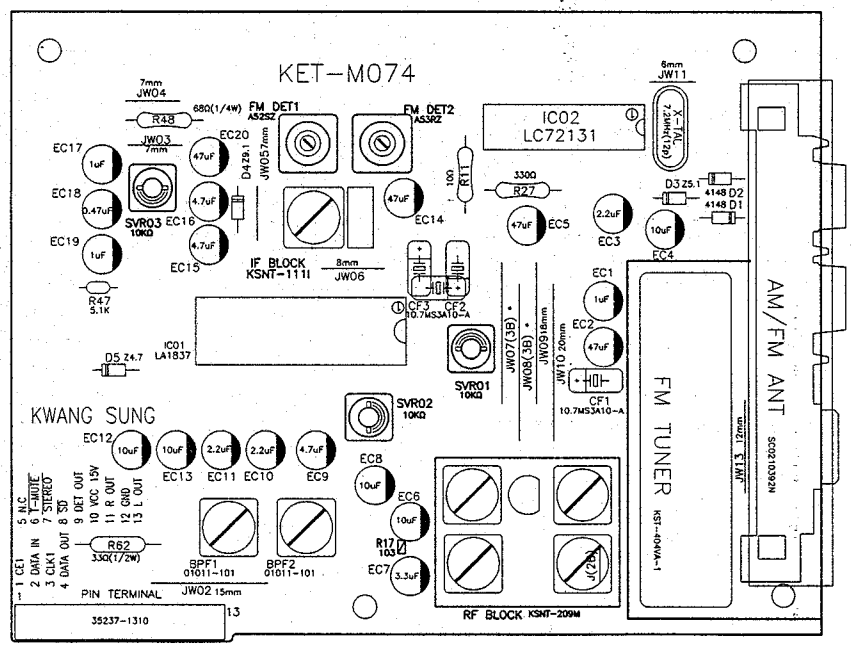

2-2. AM(MW) Alignment

Output of signal generator should not be greater than necessary to obtain an optimum output reading.
Signal generator modulation 30%
Signal frequency 400Hz
Modulation frequency ..... 603, 999, 1404kHz (/A/K/N)
Modulation frequency ..... 600, 1000, 1400kHz (/U)
Switch ..... press the BAND Button to AM

Step	Subject	Signal generator setting	Set frequency setting	Equipment connection	Adjustment point	Adjust for
1	Tunning voltage	522kHz (/A/K/N) 520kHz (/U)	522kHz (/A/K/N) 520kHz (/U)	DC voltmeter	RF BLOCK OSC coil	522 kHz : 1.0 ~ 1.3V 1611 kHz : 7.0 ~ 8.5V
2	IF Tracking	603kHz (/A/K/N) 600kHz (/U)	603kHz (/A/K/N) 600kHz (/U)	AC voltmeter oscilloscope tape monitor L/R	IF BLOCK Coil KSNT-111I	Maximize audio output
3	RF Tracking	603kHz (/A/K/N) 600kHz (/U)	603kHz (/A/K/N) 600kHz (/U)	AC voltmeter oscilloscope tape monitor L/R	RF BLOCK ANT coil	Maximize audio output Repeat LOW, HIGH frequency
4	Seek level	999kHz (/A/K/N) 1000kHz (/U)	999kHz (/A/K/N) 1000kHz (/U)	AC voltmeter oscilloscope tape monitor L/R	SVR 03	Tuned on point

2-3. LW Alignment (/A/N)

Output of signal generator should not be greater than necessary to obtain an optimum output reading.
Signal generator modulation 30%
Signal frequency 400Hz
Modulation frequency 162, 207, 252kHz
Switch ..... press the BAND Button to LW

Step	Subject	Signal generator setting	Set frequency setting	Equipment connection	Adjustment point	Adjust for
1	Tunning voltage	152kHz	152kHz	DC voltmeter	RF BLOCK OSC coil	522 kHz : 1.5 ~ 2.3V 1611 kHz : 6.0 ~ 7.5V
2	RF Tracking	162kHz	162kHz	AC voltmeter oscilloscope tape monitor L/R	RF BLOCK ANT coil	Maximize audio output Repeat LOW, HIGH frequency
3	Seek level	207kHz	207kHz	AC voltmeter oscilloscope tape monitor L/R		Tuned on point

2-4. FM Alignment

Output of signal generator should not be greater than necessary to obtain an optimum output reading.

Signal generator modulation ..... MAIN : 53.5%, PILOT : 10% (/A/K/N)
MAIN : 90%, PILOT : 10% (/U)

Signal frequency ..... 1kHz / Deviation : 40kHz (/A/K/N)
1kHz / Deviation : 75kHz (/U)

Modulation frequency 90.1MHz, 98.1MHz, 106.1MHz

Switch ..... press the BAND Button to FM

Step	Subject	Signal generator setting	Set frequency setting	Equipment connection	Adjustment point	Adjust for
1	Tunning voltage	87.5kHz 108kHz	87.5kHz 108kHz	DC voltmeter		87.5 MHz : 1.35 ~ 1.65V 108.0 MHz : 6.5V ~ 8.5V
2	FM DET.0V and Distortion Adj	98.1kHz	98.1kHz	AC voltmeter oscilloscope DC voltmeter tape monitor L/R	FD1 , FD2 R17	Minimize 0V and distortion
3	STEREO Separetion	98.1kHz	98.1kHz	AC voltmeter oscilloscope DC voltmeter tape monitor L/R	MIX coil CO4 SVR02	Minimize STEREO distortion and Maximize separatio Separation L to R Separation R to L
4	Seek stop level	98.1kHz	98.1kHz	AC voltmeter oscilloscope tape monitor L/R	SVR 01	Scan stop point to 22dBu

9. ELECTRICAL PARTS LIST

ASSIGNMENT OF COMMON PARTS CODES.

RESISTORS

R✱✱✱: 1) GD05×××140, Carbon film fixed resistor, ±5% 1/4W
R✱✱✱: 2) GD05×××160, Carbon film fixed resistor, ±5% 1/6W
① —— Resistance value

Examples ;
①Resistance value
0.1Ω.... 001 10Ω .... 100 1kΩ .... 102 100kΩ.... 104
0.5Ω.... 005 18Ω .... 180 2.7kΩ .... 272 680kΩ.... 684
1Ω.... 010 100Ω .... 101 10kΩ .... 103 1MΩ.... 105
6.8Ω.... 068 390Ω .... 391 22kΩ .... 223 4.7MΩ.... 475

Note ; Please distinguish 1/4W from 1/6W by the shape of parts used actually.

CAPACITORS

C✱✱✱: CERAMIC CAP.
3) DD1××××370, Ceramic capacitor
② ③ Disc type
Temp.coeff.P350 ~N1000, 50V
Capacity value
Tolerance

Examples ;
② Tolerance (Capacity deviation)
±0.25 pF 0
±0.5 pF 1
±5% 5
✱ Tolerance of COMMON PARTS handled here are as follows :
0.5 pF~ 5 pF .... ±0.25 pF
6 pF~ 10 pF .... ±0.5 pF
12 pF~ 560 pF .... ±5%
③ Capacity value
0.5 pF .... 005 3 pF .... 030 100 pF 101
1 pF .... 010 10 pF .... 100 220 pF 221
1.5 pF .... 015 47 pF .... 470 560 pF 561

C✱✱✱ : CERAMIC CAP.
4) DK16××× 300, High dielectric constant ceramic capacitor
④ Disc type
Temp.chara. 2B4, 50V
Capacity value

Examples ;
④ Capacity value
100 pF .... 101 1000 pF .... 102 10000 pF 103
470 pF .... 471 2200 pF 222

C✱✱✱ : 5) ELECTROLY CAP.(⏚), 6) FILM CAP. (⫫)
5) EA×××××× 10, Electrolytic capacitor
⑤ ⑥ One-way lead type, Tolerance ±20%
Working voltage
Capacity value

Examples ;
⑤ Capacity value
0.1 μF.... 104 4.7 μF .... 475 100 μF 107
0.33 μF.... 334 10 μF .... 106 330 μF 337
1 μF.... 105 22 μF .... 226 1100 μF 118
2200 μF 228
⑥ Working voltage
6.3V.... 006 25V 025
10V.... 010 35V 035
16V.... 016 50V 050

6) DF15××× 350 → Plastic film capacitor
DF15××× 310 → One-way type, Mylar ±5% 50V
DF16××× 310 → Plastic film capacitor
⑦ One-way type, Mylar ±10% 50V
Capacity value

Examples ;
⑦ Capacity value
0.001 μF(1000 pF) ..... 102 0.1 μF.... 104
0.0018 μF..... 182 0.56 μF.... 564
0.01 μF..... 103 1 μF.... 105
0.015 μF..... 153

NOTE : 1) The above CODES (R✱✱✱ , R✱✱✱ , C✱✱✱ , C✱✱✱ and C ✱✱✱) are omitted on the schematic diagram in some case.
2) On the occasion, be confirmed the common parts on the parts list.
3) Refer to "Common Parts List" for the other common parts (**RI05, DD4, DK4**).

NOTE ON SAFETY FOR FUSIBLE RESISTOR :

The suppliers and their type numbers of fusible resistors are as follows;

1. KOA Corporation

Part No. (MJI)	Type No. (KOA)	Description
NH05×××140	RF25S××××ΩJ	(±5% 1/4W)
NH05×××120	RF50S××××ΩJ	(±5% 1/2W)
NH85×××110	RF73B2A××××ΩJ	(±5% 1/10W)
NH95×××140	RF73B2E××××ΩJ	(±5% 1/4W)

✱ Resistance value — Resistance value (0.1Ω – 10 kΩ)

2. Matsushita Electronic Components Co., Ltd

Part No. (MJI)	Type No. (MEC)	Description
NF05×××140 RF05×××140	ERD-2FCJ×××	(±5% 1/4W)
NF02×××140 RF02×××140	ERD-2FCG×××	(±2% 1/4W)

✱Resistance value — ✱Resistance value

Examples ;
✱ Resistance value
0.1Ω.... 001 10Ω .... 100 1kΩ .... 102 100kΩ.... 104
0.5Ω.... 005 18Ω .... 180 2.7kΩ .... 272 680kΩ.... 684
1Ω.... 010 100Ω .... 101 10kΩ .... 103 1MΩ.... 105
6.8Ω.... 068 390Ω .... 391 22kΩ .... 223 4.7MΩ.... 475

ABBREVIATION AND MARKS			
ANT.	: ANTENNA	BATT.	: BATTERY
CAP.	: CAPACITOR	CER.	: CERAMIC
CONN.	: CONNECTING	DIG.	: DIGITAL
HP	: HEADPHONE	MIC.	: MICROPHONE
μ-PRO	: MICROPROCESSOR	REC.	: RECORDING
RES.	: RESISTOR	SPK	: SPEAKER
SW	: SWITCH	TRANSF.	: TRANSFORMER
TRIM.	: TRIMMING	TRS.	: TRANSISTOR
VAR.	: VARIABLE	XTAL	: CRYSTAL

NOTE ON FUSE :

Regarding to all parts of parts code **FS20xxx2xx**, replace only with Wickmann-Werke GmbH, Type 372 non glass type fuse.

NOTE ON SAFETY :

Symbol ⚠ Fire or electrical shock hazard. Only original parts should be used to replaced any part marked with symbol ⚠ . Any other component substitution (other than original type), may increase risk of fire or electrical shock hazard.

安全上の注意 :

⚠がついている部品は、安全上重要な部品です。必ず指定されている部品番号の部品を使用して下さい。

010728MIT

POS. NO	VERS. COLOR	PART NO. (FOR EUR)	PART NO. (MJI)	DESCRIPTION		
				AMP PCB		
-		nsp	nsp	CN,WIRE	80MM/10P 5264-10=5395-10 RD1007#20 2.5MM	L000800100030
-		nsp	nsp	CN,WIRE	80MM/9P 5264-09=5395-09 RD1007#20 2.5MM	L000800090020
C201xx		nsp	OA47505020	CAP.E.GENERIC	4.7μF/50V(M) 5x11,P=5(LUXON-GR) 85,2000H	N211247978110
C202xx		nsp	nsp	C,CERAMIC HIK AXIAL	B330pF-K/50V-52RE	D005331277520
C203xx		nsp	nsp	C,CERAMIC HIK AXIAL	B0.001μF-K/50V-52RE	D005102177530
C204xx		nsp	OA22605020	CAP.E.GENERIC	22μF/50V(M) 5x11,P=5(LUXON-GR) 85,2000H	N211222078110
C205xx		nsp	OA22605020	CAP.E.GENERIC	22μF/50V(M) 5x11,P=5(LUXON-GR) 85,2000H	N211222078110
C206xx		nsp	OA22701020	CAP.E.GENERIC	220μF/10V(M) 6.3x11,P=5(LUXON-GR) 85,2000H	N211222128110
C209xx		nsp	OA10605020	CAP.E.GENERIC	10μF/50V(M) 5x11,P=5(LUXON-GR) 85,2000H	N211210078110
C210xx		nsp	*OA000090R	CAP.E.GENERIC	47μF/100V(M) 10x15,P=5(LUXON-GR) 85,2000H	N2112470C8110
C211xx		nsp	*OA000090R	CAP.E.GENERIC	47μF/100V(M) 10x15,P=5(LUXON-GR) 85,2000H	N2112470C8110
C212xx		nsp	nsp	C,CERAMIC HIK DISC	F0.022μF-Z/50V-5RE	D004223597050
C214xx		nsp	nsp	C,CERAMIC T.C AXIAL	SL4.7pF-K/50V-52RE	D0014R7077530
C215xx		nsp	nsp	C,CERAMIC HIK AXIAL	B100pF-K/50V-52RE	D005101177520
CP201		nsp	nsp	CN,WAFER 2.0MM	GIL-S-12P-S2T2-EF	L101220120000
D202xx		nsp	*HD201720R	D,SWITCHING	1N4148-52RE 75V 150MA DO-34 (MIC)	K000414803520
D203xx		nsp	*HD201720R	D,SWITCHING	1N4148-52RE 75V 150MA DO-34 (MIC)	K000414803520
J201						
ʃ		nsp	nsp	CN,WIRE 1P	JUMPER (0.6/52MM)	L045084006040
J277						
L201xx		nsp	nsp	COIL,FILTER-INDUCTOR	INDUCTOR COIL J9000031	D330900001320
Q201xx						
ʃ		*HT100590R	*HT100590R	SEMI,TR/GE PNP 2SA	KSA992F,0.5W/TO92-REEL	J5000992F0050
Q204xx						
Q205xx		*HT300860R	*HT300860R	SEMI,TR/GE NPN 2SC	KSC1845F,0.5W/TO92-REEL	J5021845F0000
Q206xx		*HT300860R	*HT300860R	SEMI,TR/GE NPN 2SC	KSC1845F,0.5W/TO92-REEL	J5021845F0000
Q207xx		*HT100590R	*HT100590R	SEMI,TR/GE PNP 2SA	KSA992F,0.5W/TO92-REEL	J5000992F0050
Q208xx		*HT100640R	*HT100640R	SEMI,TR/GE PNP 2SA	KTA1024Y,1W/TO92L-REEL	J5001024Y0050
Q209xx		*HT300920R	*HT300920R	SEMI,TR/GE NPN 2SC	KTC3206Y,1W/TO92L-REEL	J5023206Y0050
Q213xx		*HT200410R	*HT200410R	SEMI TR/GE PNP 2SB	SAP16PY 150W LF550(5P) POWER Tr.	J501151000010
Q214xx		*HT400480R	*HT400480R	SEMI TR/GE NPN 2SD	SAP16NO 150W LF550(5P) POWER Tr.	J503151000010
Q215xx		*HT300860R	*HT300860R	SEMI,TR/GE NPN 2SC	KSC1845F,0.5W/TO92-REEL	J5021845F0000
R201xx		nsp	nsp	R,CARBON FILM	470-J,1/5W-52RE-AX	C00004716P520
R202xx		nsp	nsp	R,CARBON FILM	33K-J,1/5W-52RE-AX	C00003336P520
R203xx		nsp	nsp	R,CARBON FILM	15-J,1/5W-52RE-AX	C00001506P520
R204xx		nsp	nsp	R,CARBON FILM	15-J,1/5W-52RE-AX	C00001506P520
R205xx		nsp	nsp	R,CARBON FILM	750-J,1/5W-52RE-AX	C00007516P520
R206xx		nsp	nsp	R,CARBON FILM	750-J,1/5W-52RE-AX	C00007516P520
R207xx		nsp	nsp	R,CARBON FILM	470-J,1/5W-52RE-AX	C00004716P520
R208xx		nsp	nsp	R,CARBON FILM	68-J,1/5W-52RE-AX	C00006806P520
R209xx		nsp	nsp	R,CARBON FILM	150-J,1/5W-52RE-AX	C00001516P520
R210xx		nsp	nsp	R,CARBON FILM	10K-J,1/5W-52RE-AX	C00001036P520
R211xx		nsp	nsp	R,CARBON FILM	43K-J,1/5W-52RE-AX	C00004336P520
R212xx		nsp	nsp	R,CARBON FILM	1.3K-J,1/5W-52RE-AX	C00001326P520
R213xx		nsp	nsp	R,CARBON FILM	33K-J,1/5W-52RE-AX	C00003336P520
R214xx						
ʃ		nsp	nsp	R,CARBON FILM	560-J,1/5W-52RE-AX	C00005616P520
R220xx						
R221xx		nsp	nsp	R,CARBON FILM	82-J,1/5W-52RE-AX	C00008206P520
R222xx		nsp	nsp	R,CARBON FILM	82-J,1/5W-52RE-AX	C00008206P520
R223xx		nsp	nsp	R,CARBON FILM	22K-J,1/5W-52RE-AX	C00002236P520
R224xx		nsp	nsp	R,CARBON FILM	22K-J,1/5W-52RE-AX	C00002236P520
R225xx		nsp	nsp	R,CARBON FILM	4.7-J,1/5W-52RE-AX	C0004R706P520
R228xx		nsp	nsp	R,METAL FILM 100PPM	220-J,1/4W-R.REEL	C060022163050
R229xx		nsp	nsp	R,METAL FILM 100PPM	220-J,1/4W-R.REEL	C060022163050
R231xx		nsp	nsp	R,CARBON FILM	4.7-J,1/5W-52RE-AX	C0004R706P520
R232xx		nsp	nsp	R,CARBON FILM	4.7-J,1/5W-52RE-AX	C0004R706P520
R233xx		nsp	nsp	R,CARBON FILM	10K-J,1/5W-52RE-AX	C00001036P520
R235xx		nsp	nsp	R,CARBON FILM	10K-J,1/5W-52RE-AX	C00001036P520
R236xx		nsp	nsp	R,CARBON FILM	2.2K-J,1/5W-52RE-AX	C00002226P520
R237xx						
ʃ		nsp	nsp	R,CARBON FILM	39-J,1/5W-52RE-AX	C00003906P520
R240xx						

NOTE : "nsp" PART IS LISTED FOR REFERENCE ONLY, MARANTZ WILL NOT SUPPLY THESE PARTS.

POS. NO	VERS. COLOR	PART NO. (FOR EUR)	PART NO. (MJI)	DESCRIPTION		
R241xx		nsp	nsp	R,CARBON FILM	150K-J,1/5W-52RE-AX	C00001546P520
R245xx		*NR000010R	*NR000010R	R,FIXED,METAL	RNS-RT-2WJ-0.47 4.3*11.1(MAX)	N1121366478l0
R246xx		*NR000010R	*NR000010R	R,FIXED,METAL	RNS-RT-2WJ-0.47 4.3*11.1(MAX)	N1121366478l0
				DSP PCB		
-		nsp	nsp	SOCKET,IC704	IC SOCKET 32PIN	G450320000010
C701						
ʃ		nsp	DK98104300	C,CERAMIC CHIP HIK	Y5V0.1μF-Z/50V-1608REEL	D011104597160
C706						
C707		nsp	DD95220300	C,CERAMIC CHIP T.C	COG22pF-J/50V-1608REEL	D010220167160
C708		nsp	OA47601050	CAP.E.GENERIC	47μF/10V(M) 5X11,P=5(LUXON-GR) 85,2000H	N211247028110
C709		nsp	OA47601050	CAP.E.GENERIC	47μF/10V(M) 5X11,P=5(LUXON-GR) 85,2000H	N211247028110
C710		nsp	OA47601050	CAP.E.GENERIC	47μF/10V(M) 5X11,P=5(LUXON-GR) 85,2000H	N211247028110
C711						
ʃ		nsp	DD95220300	C,CERAMIC CHIP T.C	COG22pF-J/50V-1608REEL	D010220167160
C715						
C716		nsp	DK98104300	C,CERAMIC CHIP HIK	Y5V0.1μF-Z/50V-1608REEL	D011104597160
C717		nsp	OA33505020	CAP.E.GENERIC	3.3μF/50V(M) 5x11,P=5(LUXON-GR) 85,2000H	N2112339781l0
C720		nsp	OA33505020	CAP.E.GENERIC	3.3μF/50V(M) 5x11,P=5(LUXON-GR) 85,2000H	N2112339781l0
C721		nsp	DK98104300	C,CERAMIC CHIP HIK	Y5V0.1μF-Z/50V-1608REEL	D011104597160
C722		nsp	DD95220300	C,CERAMIC CHIP T.C	COG22pF-J/50V-1608REEL	D010220167160
C723		nsp	DD95220300	C,CERAMIC CHIP T.C	COG22pF-J/50V-1608REEL	D010220167160
C725		nsp	DK98104300	C,CERAMIC CHIP HIK	Y5V0.1μF-Z/50V-1608REEL	D011104597160
C726		nsp	OA10701020	CAP.E.GENERIC	100μF/10V(M) 5X11,P=5(LUXON-GR) 85,2000H	N211210128110
C727		nsp	OA10505020	CAP.E.GENERIC	1μF/50V(M) 5x11,P=5(LUXON-GR) 85,2000H	N211210978110
C728		nsp	DK98104300	C,CERAMIC CHIP HIK	Y5V0.1μF-Z/50V-1608REEL	D011104597160
C729		nsp	OA10505020	CAP.E.GENERIC	1μF/50V(M) 5x11,P=5(LUXON-GR) 85,2000H	N211210978110
C730		nsp	OA10605020	CAP.E.GENERIC	10μF/50V(M) 5x11,P=5(LUXON-GR) 85,2000H	N211210078110
C731		nsp	OA10701020	CAP.E.GENERIC	100μF/10V(M) 5X11,P=5(LUXON-GR) 85,2000H	N211210128110
C732		nsp	DK98104300	C,CERAMIC CHIP HIK	Y5V0.1μF-Z/50V-1608REEL	D011104597160
C733		nsp	DK98104300	C,CERAMIC CHIP HIK	Y5V0.1μF-Z/50V-1608REEL	D011104597160
C734		nsp	OA10701020	CAP.E.GENERIC	100μF/10V(M) 5X11,P=5(LUXON-GR) 85,2000H	N211210128110
C735		nsp	DK98104300	C,CERAMIC CHIP HIK	Y5V0.1μF-Z/50V-1608REEL	D011104597160
C736		nsp	DK98104300	C,CERAMIC CHIP HIK	Y5V0.1μF-Z/50V-1608REEL	D011104597160
C737		nsp	DK98104300	C,CERAMIC CHIP HIK	Y5V0.1μF-Z/50V-1608REEL	D011104597160
C738		nsp	DD95101300	C,CERAMIC CHIP T.C	COG100pF-J/50V-1608REEL	D010101167160
C739		nsp	DK98104300	C,CERAMIC CHIP HIK	Y5V0.1μF-Z/50V-1608REEL	D011104597160
C740		nsp	DK96103300	C,CERAMIC CHIP HIK	X7R0.01μF-K/50V-1608REEL	D011103777160
C741		nsp	DK98104300	C,CERAMIC CHIP HIK	Y5V0.1μF-Z/50V-1608REEL	D011104597160
C742		nsp	DK98104300	C,CERAMIC CHIP HIK	Y5V0.1μF-Z/50V-1608REEL	D011104597160
C743		nsp	DK96103300	C,CERAMIC CHIP HIK	X7R0.01μF-K/50V-1608REEL	D011103777160
C744		nsp	DK98104300	C,CERAMIC CHIP HIK	Y5V0.1μF-Z/50V-1608REEL	D011104597160
C745		nsp	DK98104300	C,CERAMIC CHIP HIK	Y5V0.1μF-Z/50V-1608REEL	D011104597160
C746		nsp	DK96103300	C,CERAMIC CHIP HIK	X7R0.01μF-K/50V-1608REEL	D011103777160
C747		nsp	OA10605020	CAP.E.GENERIC	10μF/50V(M) 5x11,P=5(LUXON-GR) 85,2000H	N211210078110
C748		nsp	DK98104300	C,CERAMIC CHIP HIK	Y5V0.1μF-Z/50V-1608REEL	D011104597160
C749		nsp	DD95270300	C,CERAMIC CHIP T.C	COG27pF-J/50V-1608REEL	D010270167160
C750		nsp	DD95270300	C,CERAMIC CHIP T.C	COG27pF-J/50V-1608REEL	D010270167160
C751		nsp	DK98104300	C,CERAMIC CHIP HIK	Y5V0.1μF-Z/50V-1608REEL	D011104597160
C752		nsp	DK98104300	C,CERAMIC CHIP HIK	Y5V0.1μF-Z/50V-1608REEL	D011104597160
C753		nsp	OA10701020	CAP.E.GENERIC	100μF/10V(M) 5X11,P=5(LUXON-GR) 85,2000H	N211210128110
C754		nsp	DK98104300	C,CERAMIC CHIP HIK	Y5V0.1μF-Z/50V-1608REEL	D011104597160
C755		nsp	*OA000070R	CAP.E.GENERIC	220μF/6.3V(M) 6.3X11,P=5(LUXON-GR) 85,2000H	N211222118110
C756		nsp	DK98104300	C,CERAMIC CHIP HIK	Y5V0.1μF-Z/50V-1608REEL	D011104597160
C757		nsp	DK98104300	C,CERAMIC CHIP HIK	Y5V0.1μF-Z/50V-1608REEL	D011104597160
C758		nsp	DK96103300	C,CERAMIC CHIP HIK	X7R0.01μF-K/50V-1608REEL	D011103777160
C759		nsp	DD95471300	C,CERAMIC CHIP T.C	COG470pF-J/50V-1608REEL	D010471167160
C760		nsp	OA47601050	CAP.E.GENERIC	47μF/10V(M) 5X11,P=5(LUXON-GR) 85,2000H	N211247028110
C761		nsp	DK98104300	C,CERAMIC CHIP HIK	Y5V0.1μF-Z/50V-1608REEL	D011104597160
C762		nsp	OA22505020	CAP.E.GENERIC	2.2μF/50V(M) 5x11,P=5(LUXON-GR) 85,2000H	N211222978110
C763		nsp	DK96103300	C,CERAMIC CHIP HIK	X7R0.01μF-K/50V-1608REEL	D011103777160
C764		nsp	OA10605020	CAP.E.GENERIC	10μF/50V(M) 5x11,P=5(LUXON-GR) 85,2000H	N211210078110
C765		nsp	DK98104300	C,CERAMIC CHIP HIK	Y5V0.1μF-Z/50V-1608REEL	D011104597160
C766		nsp	OA10505020	CAP.E.GENERIC	1μF/50V(M) 5x11,P=5(LUXON-GR) 85,2000H	N211210978110

NOTE : "nsp" PART IS LISTED FOR REFERENCE ONLY, MARANTZ WILL NOT SUPPLY THESE PARTS.

SR5300

POS. NO	VERS. COLOR	PART NO. (FOR EUR)	PART NO. (MJI)	DESCRIPTION		
C767		nsp	DK98104300	C,CERAMIC CHIP HIK	Y5V0.1μF-Z/50V-1608REEL	D011104597160
C780		nsp	OA10605020	CAP.E.GENERIC	10μF/50V(M) 5x11,P=5(LUXON-GR) 85,2000H	N211210078110
C782		nsp	OA10701020	CAP.E.GENERIC	100μF/10V(M) 5X11,P=5(LUXON-GR) 85,2000H	N211210128110
C783		nsp	DK98104300	C,CERAMIC CHIP HIK	Y5V0.1μF-Z/50V-1608REEL	D011104597160
C784		nsp	DD95270300	C,CERAMIC CHIP T.C	COG27pF-J/50V-1608REEL	D010270167160
C785		nsp	DK98104300	C,CERAMIC CHIP HIK	Y5V0.1μF-Z/50V-1608REEL	D011104597160
C786		nsp	DK96102300	C,CERAMIC CHIP HIK	X7R1000pF-K/50V-1608REEL	D011102777160
C787		nsp	DK98104300	C,CERAMIC CHIP HIK	Y5V0.1μF-Z/50V-1608REEL	D011104597160
C788		nsp	DK98104300	C,CERAMIC CHIP HIK	Y5V0.1μF-Z/50V-1608REEL	D011104597160
C789		nsp	OA47601050	CAP.E.GENERIC	47μF/10V(M) 5X11,P=5(LUXON-GR) 85,2000H	N211247028110
C790		nsp	DK98104300	C,CERAMIC CHIP HIK	Y5V0.1μF-Z/50V-1608REEL	D011104597160
C790A		nsp	DK98104300	C,CERAMIC CHIP HIK	Y5V0.1μF-Z/50V-1608REEL	D011104597160
C791		nsp	OA10505020	CAP.E.GENERIC	1μF/50V(M) 5x11,P=5(LUXON-GR) 85,2000H	N211210978110
C792		nsp	DK98104300	C,CERAMIC CHIP HIK	Y5V0.1μF-Z/50V-1608REEL	D011104597160
C793		nsp	OA10701020	CAP.E.GENERIC	100μF/10V(M) 5X11,P=5(LUXON-GR) 85,2000H	N211210128110
C802		nsp	DK96103300	C,CERAMIC CHIP HIK	X7R0.01μF-K/50V-1608REEL	D011103777160
C803		nsp	OA10505020	CAP.E.GENERIC	1μF/50V(M) 5x11,P=5(LUXON-GR) 85,2000H	N211210978110
C804		nsp	DK98104300	C,CERAMIC CHIP HIK	Y5V0.1μF-Z/50V-1608REEL	D011104597160
C805		nsp	DK98104300	C,CERAMIC CHIP HIK	Y5V0.1μF-Z/50V-1608REEL	D011104597160
C806		nsp	OA22505020	CAP.E.GENERIC	2.2μF/50V(M) 5x11,P=5(LUXON-GR) 85,2000H	N211222978110
C807		nsp	OA10605020	CAP.E.GENERIC	10μF/50V(M) 5x11,P=5(LUXON-GR) 85,2000H	N211210078110
C808AFx		nsp	OA10605020	CAP.E.GENERIC	10μF/50V(M) 5x11,P=5(LUXON-GR) 85,2000H	N211210078110
C809AFx		nsp	OA10605020	CAP.E.GENERIC	10μF/50V(M) 5x11,P=5(LUXON-GR) 85,2000H	N211210078110
C810AFx		nsp	DK98104300	C,CERAMIC CHIP HIK	Y5V0.1μF-Z/50V-1608REEL	D011104597160
C811AFx		nsp	DK98104300	C,CERAMIC CHIP HIK	Y5V0.1μF-Z/50V-1608REEL	D011104597160
C812AFx		nsp	DD95101300	C,CERAMIC CHIP T.C	COG100pF-J/50V-1608REEL	D010101167160
C813AFx		nsp	DD95101300	C,CERAMIC CHIP T.C	COG100pF-J/50V-1608REEL	D010101167160
C814AFx		nsp	DK96102300	C,CERAMIC CHIP HIK	X7R1000pF-K/50V-1608REEL	D011102777160
C815		nsp	OA10702520	CAP.E.GENERIC	100μF/25V(M) 6.3x11,P=5(LUXON-GR) 85,2000H	N211210148110
C816		nsp	OA10702520	CAP.E.GENERIC	100μF/25V(M) 6.3x11,P=5(LUXON-GR) 85,2000H	N211210148110
C817xx		nsp	OA10605020	CAP.E.GENERIC	10μF/50V(M) 5x11,P=5(LUXON-GR) 85,2000H	N211210078110
C818xx		nsp	OA10605020	CAP.E.GENERIC	10μF/50V(M) 5x11,P=5(LUXON-GR) 85,2000H	N211210078110
C819xx		nsp	DK96272300	C,CERAMIC CHIP HIK	X7R2700pF-K/50V-1608REEL	D011272777160
C820xx		nsp	DK96272300	C,CERAMIC CHIP HIK	X7R2700pF-K/50V-1608REEL	D011272777160
C821xx		nsp	DD95471300	C,CERAMIC CHIP T.C	COG470pF-J/50V-1608REEL	D010471167160
C822xx		nsp	DD95471300	C,CERAMIC CHIP T.C	COG470pF-J/50V-1608REEL	D010471167160
C823xx		nsp	DK98104300	C,CERAMIC CHIP HIK	Y5V0.1μF-Z/50V-1608REEL	D011104597160
C824xx		nsp	DK98104300	C,CERAMIC CHIP HIK	Y5V0.1μF-Z/50V-1608REEL	D011104597160
C825xx		nsp	OA10605020	CAP.E.GENERIC	10μF/50V(M) 5x11,P=5(LUXON-GR) 85,2000H	N211210078110
C826xx		nsp	DK96332300	C,CERAMIC CHIP HIK	X7R3300pF-K/50V-1608REEL	D011332777160
C827SW		nsp	DK96103300	C,CERAMIC CHIP HIK	X7R0.01μF-K/50V-1608REEL	D011103777160
C828xx		nsp	OA10605020	CAP.E.GENERIC	10μF/50V(M) 5x11,P=5(LUXON-GR) 85,2000H	N211210078110
C830SW		nsp	DD95471300	C,CERAMIC CHIP T.C	COG470pF-J/50V-1608REEL	D010471167160
C831		nsp	OA10605020	CAP.E.GENERIC	10μF/50V(M) 5x11,P=5(LUXON-GR) 85,2000H	N211210078110
CB701						
ʃ		*FC900290R	*FC900290R	BEAD,COIL CHIP	HB-IT2012-121JT(CERATEC)2012REEL	7611010000020
CB717						
CP113		nsp	nsp	CN.WAFER 2.0MM	TUC-P14X-B1 BD-TO-BD 14P(35237-14)	L101100031410
CP114		nsp	nsp	CN.WAFER 2.0MM	TUC-P16X-B1 BD-TO-BD 16P(35237-16)	L101100031610
CP115		nsp	nsp	CN.WAFER 2.0MM	TUC-P18X-B1 BD-TO-BD 18P(35237-18)	L101100031810
D701		nsp	*HD201560R	D,SWITCHING CHIP	KDS160(UF) /USC	K005016000010
D702		nsp	*HD201560R	D,SWITCHING CHIP	KDS160(UF) /USC	K005016000010
D704		nsp	*HD201560R	D,SWITCHING CHIP	KDS160(UF) /USC	K005016000010
IC701		HC700411Y0	HC700411Y0	IC,LOGIC	74VHCU04 SOP14 /HEX INVERTER	J040740400260
IC702		*HC700330R	*HC700330R	IC,LOGIC	MM74HC151MX SOP16 /8CH DIG. MULTIPLEXER	J040741510040
IC703		*HC900020R	*HC900020R	IC,LINEAR-REGULATOR	RC1117S33ST SOT223 3.3V 1AMP(NO DROP)	J126111733010
IC704		*HC107760R	*HC107760R	IC,MEMORY-EEPROM	M27W401-80B6 4M 80NANO PDIP32	J000274010010
IC705		*HC700360R	*HC700360R	IC,LOGIC	MM74LCX574WMX SOP20 /LOWVOLT DUAL FF	J040745740050
IC706		*HC700360R	*HC700360R	IC,LOGIC	MM74LCX574WMX SOP20 /LOWVOLT DUAL FF	J040745740050
IC707		HC10405030	HC10405030	IC,LOGIC-INTERFACE	LC89055W(ES4)	J046890550010
IC708		*HC700440R	*HC700440R	IC,LOGIC	MM74HC00MTCX QUAD 2-INPUT NAND GATE	J040740000190
IC709		*HC107260R	*HC107260R	IC,ANALOG	CS49326-CL MULTI-CH DEC.(DOLBY/DTS)PLCC44	J080493260010
IC710		*HC900010R	*HC900010R	IC,LINEAR-REGULATOR	RC1117S25T SOT223 2.5V 1AMP(NO DROP)	J126111725010
IC711		*HC700450R	*HC700450R	IC,LOGIC	MM74LCX244WMX SOP20 /LOWVOLT BUFFER	J040742440150

NOTE : "nsp" PART IS LISTED FOR REFERENCE ONLY, MARANTZ WILL NOT SUPPLY THESE PARTS.

SR5300

POS. NO	VERS. COLOR	PART NO. (FOR EUR)	PART NO. (MJI)	DESCRIPTION		
IC712		*HC700450R	*HC700450R	IC,LOGIC	MM74LCX244WMX SOP20 /LOWVOLT BUFFER	J040742440150
IC713		*HC700350R	*HC700350R	IC,LOGIC	MM74HCT244WMX SOP20 /OCTAL 3STATE BUF.	J040742440160
IC714		*HC108120R	*HC108120R	IC,LOGIC-D/A CONVER	CS4382-KQ 192KHZ 8CH D/A CONV./TQFP44	J042438200020
IC715		HC10035480	HC10035480	IC,LOGIC-A/D CONVER	AK5380 TSSOP16 /96KHZ 24BIT	J043538000010
IC716		HC10159210	HC10159210	IC,LINEAR OP	BA4510F-T1/SOP8	J121451000010
IC717		HC10159210	HC10159210	IC,LINEAR OP	BA4510F-T1/SOP8	J121451000010
IC718		HC3890509F	HC3890509F	IC,LINEAR-REGULATOR	NJM7805FA,16W-T0220F MOLD	J126780500130
IC719						
ʃ		HC10102090	HC10102090	IC,LINEAR OP	NJM2068M-SOP8P	J121206800020
IC725						
JACK701		*YT002570R	*YT002570R	MODULE	GP1FA502RZ /OPTICAL RCVR 96KHZ SHUTTER	E100150200020
JACK702		*YT002570R	*YT002570R	MODULE	GP1FA502RZ /OPTICAL RCVR 96KHZ SHUTTER	E100150200020
JACK703		*YT002580R	*YT002580R	MODULE	GP1FA502TZ /OPT. TRANSMIT 96KHZ SHUTTER	E100150200030
JACK704		*YT002620R	*YT002620R	TER,RCA 3PIN	DAERYUNG/JC030012ZN(B B B)GND1P;NI CAP 2P	G606300120040
L701		nsp	nsp	COIL,FILTER-INDUCTOR	4.7UH-Q50/56M-R1.7-5REEL LAL03VB	D3304R7000150
L702		nsp	nsp	COIL,FILTER-INDUCTOR	4.7UH-Q50/56M-R1.7-5REEL LAL03VB	D3304R7000150
L703		nsp	nsp	COIL,FILTER-INDUCTOR	4.7UH-Q50/56M-R1.7-5REEL LAL03VB	D3304R7000150
L704		nsp	nsp	COIL,FILTER-INDUCTOR	2.2UH-Q50/110M-R1.2-5REEL LAL03VB	D3302R2000150
L705		nsp	nsp	COIL,FILTER-INDUCTOR	2.2UH-Q50/110M-R1.2-5REEL LAL03VB	D3302R2000150
Q701		*HT300870R	*HT300870R	SEMI,CHIP TR/NPN 2SC	KTC2875B(MB) 0.15W/LOW-ON-RES SOT23(RTK)	J5222875B0010
Q702		BA10023210	BA10023210	SEMI,CHIP TR/PNP 2SA	DTA114EK(14) 0.2W/SMT-REEL	J5200114E0210
Q702AFL		*HT300870R	*HT300870R	SEMI,CHIP TR/NPN 2SC	KTC2875B(MB) 0.15W/LOW-ON-RES SOT23(RTK)	J5222875B0010
Q702AFR		*HT300870R	*HT300870R	SEMI,CHIP TR/NPN 2SC	KTC2875B(MB) 0.15W/LOW-ON-RES SOT23(RTK)	J5222875B0010
Q704		BA20005210	BA20005210	SEMI,CHIP TR/NPN 2SC	DTC114EK(24),0.2W/SMT-REEL	J5220114E0210
Q705		BA10023210	BA10023210	SEMI,CHIP TR/PNP 2SA	DTA114EK(14) 0.2W/SMT-REEL	J5200114E0210
Q706						
ʃ		*HT300870R	*HT300870R	SEMI,CHIP TR/NPN 2SC	KTC2875B(MB) 0.15W/LOW-ON-RES SOT23(RTK)	J5222875B0010
Q712						
R701		nsp	NN05750610	R,CHIP THICK	75-J,1/16W-1608REEL	C20007506M160
R702		nsp	NN05472610	R,CHIP THICK	4.7K-J,1/16W-1608REEL	C20004726M160
R703		nsp	NN05472610	R,CHIP THICK	4.7K-J,1/16W-1608REEL	C20004726M160
R704		nsp	NN05472610	R,CHIP THICK	4.7K-J,1/16W-1608REEL	C20004726M160
R705		nsp	NN05750610	R,CHIP THICK	75-J,1/16W-1608REEL	C20007506M160
R706		nsp	NN05750610	R,CHIP THICK	75-J,1/16W-1608REEL	C20007506M160
R708		nsp	NN05101610	R,CHIP THICK	100-J,1/16W-1608REEL	C20001016M160
R710		nsp	NN05101610	R,CHIP THICK	100-J,1/16W-1608REEL	C20001016M160
R711		nsp	NN05104610	R,CHIP THICK	100K-J,1/16W-1608REEL	C20001046M160
R712		nsp	NN05104610	R,CHIP THICK	100K-J,1/16W-1608REEL	C20001046M160
R714		nsp	*NN000490R	R,CHIP THICK	91-J,1/16W-1608REEL	C20009106M160
R715		nsp	NN05103610	R,CHIP THICK	10K-J,1/16W-1608REEL	C20001036M160
R717		nsp	NN05103610	R,CHIP THICK	10K-J,1/16W-1608REEL	C20001036M160
R718		nsp	NN05222610	R,CHIP THICK	2.2K-J,1/16W-1608REEL	C20002226M160
R719		nsp	NN05222610	R,CHIP THICK	2.2K-J,1/16W-1608REEL	C20002226M160
R721		nsp	NN05181610	R,CHIP THICK	180-J,1/16W-1608REEL	C20001816M160
R722		nsp	NN05103610	R,CHIP THICK	10K-J,1/16W-1608REEL	C20001036M160
R723		nsp	NN05330610	R,CHIP THICK	33-J,1/16W-1608REEL	C20003306M160
R724		nsp	NN05103610	R,CHIP THICK	10K-J,1/16W-1608REEL	C20001036M160
R725		nsp	NN05330610	R,CHIP THICK	33-J,1/16W-1608REEL	C20003306M160
R726		nsp	NN05822610	R,CHIP THICK	8.2K-J,1/16W-1608REEL	C20008226M160
R727		nsp	NN05330610	R,CHIP THICK	33-J,1/16W-1608REEL	C20003306M160
R728		nsp	NN05512610	R,CHIP THICK	5.1K-J,1/16W-1608REEL	C20005126M160
R729		nsp	NN05302610	R,CHIP THICK	3K-J,1/16W-1608REEL	C20003026M160
R730		nsp	NN05330610	R,CHIP THICK	33-J,1/16W-1608REEL	C20003306M160
R731		nsp	NN05750610	R,CHIP THICK	75-J,1/16W-1608REEL	C20007506M160
R732		nsp	NN05330610	R,CHIP THICK	33-J,1/16W-1608REEL	C20003306M160
R733		nsp	NN05330610	R,CHIP THICK	33-J,1/16W-1608REEL	C20003306M160
R734		nsp	NN05330610	R,CHIP THICK	33-J,1/16W-1608REEL	C20003306M160
R735		nsp	NN05105610	R,CHIP THICK	1M-J,1/16W-1608REEL	C20001056M160
R736		nsp	NN05330610	R,CHIP THICK	33-J,1/16W-1608REEL	C20003306M160
R738		nsp	NN05330610	R,CHIP THICK	33-J,1/16W-1608REEL	C20003306M160
R739		nsp	NN05103610	R,CHIP THICK	10K-J,1/16W-1608REEL	C20001036M160
R740		nsp	NN05103610	R,CHIP THICK	10K-J,1/16W-1608REEL	C20001036M160
R741		nsp	NN05332610	R,CHIP THICK	3.3K-J,1/16W-1608REEL	C20003326M160

NOTE : "nsp" PART IS LISTED FOR REFERENCE ONLY, MARANTZ WILL NOT SUPPLY THESE PARTS.

POS. NO	VERS. COLOR	PART NO. (FOR EUR)	PART NO. (MJI)	DESCRIPTION		
R742						
⟆		nsp	NN05103610	R,CHIP THICK	10K-J,1/16W-1608REEL	C20001036M160
R746						
R747		nsp	NN05330610	R,CHIP THICK	33-J,1/16W-1608REEL	C20003306M160
R748		nsp	NN05330610	R,CHIP THICK	33-J,1/16W-1608REEL	C20003306M160
R749		nsp	NN05103610	R,CHIP THICK	10K-J,1/16W-1608REEL	C20001036M160
R750		nsp	NN05103610	R,CHIP THICK	10K-J,1/16W-1608REEL	C20001036M160
R751		nsp	NN05330610	R,CHIP THICK	33-J,1/16W-1608REEL	C20003306M160
R752		nsp	NN05472610	R,CHIP THICK	4.7K-J,1/16W-1608REEL	C20004726M160
R753		nsp	NN05472610	R,CHIP THICK	4.7K-J,1/16W-1608REEL	C20004726M160
R754		nsp	NN05472610	R,CHIP THICK	4.7K-J,1/16W-1608REEL	C20004726M160
R755						
⟆		nsp	NN05330610	R,CHIP THICK	33-J,1/16W-1608REEL	C20003306M160
R758						
R759		nsp	NN05472610	R,CHIP THICK	4.7K-J,1/16W-1608REEL	C20004726M160
R760		nsp	NN05472610	R,CHIP THICK	4.7K-J,1/16W-1608REEL	C20004726M160
R761		nsp	NN05333610	R,CHIP THICK	33K-J,1/16W-1608REEL	C20003336M160
R762		nsp	NN05103610	R,CHIP THICK	10K-J,1/16W-1608REEL	C20001036M160
R763		nsp	NN05222610	R,CHIP THICK	2.2K-J,1/16W-1608REEL	C20002226M160
R764		nsp	NN05472610	R,CHIP THICK	4.7K-J,1/16W-1608REEL	C20004726M160
R780						
⟆		nsp	NN05330610	R,CHIP THICK	33-J,1/16W-1608REEL	C20003306M160
R789						
R790						
R791		nsp	NN05103610	R,CHIP THICK	10K-J,1/16W-1608REEL	C20001036M160
R792						
⟆		nsp	NN05330610	R,CHIP THICK	33-J,1/16W-1608REEL	C20003306M160
R796						
R797		nsp	NN05103610	R,CHIP THICK	10K-J,1/16W-1608REEL	C20001036M160
R798		nsp	NN05471610	R,CHIP THICK	470-J,1/16W-1608REEL	C20004716M160
R799		nsp	NN05474610	R,CHIP THICK	470K-J,1/16W-1608REEL	C20004746M160
R800		nsp	NN05105610	R,CHIP THICK	1M-J,1/16W-1608REEL	C20001056M160
R801AFx		nsp	NN05562610	R,CHIP THICK	5.6K-J,1/16W-1608REEL	C20005626M160
R802AFx		nsp	*NN000470R	R,CHIP THICK	2.4K-J,1/16W-1608REEL	C20002426M160
R803AFx		nsp	NN05472610	R,CHIP THICK	4.7K-J,1/16W-1608REEL	C20004726M160
R804AFx		nsp	NN05472610	R,CHIP THICK	4.7K-J,1/16W-1608REEL	C20004726M160
R805AFx		nsp	NN05472610	R,CHIP THICK	4.7K-J,1/16W-1608REEL	C20004726M160
R806AFx		nsp	NN05473610	R,CHIP THICK	47K-J,1/16W-1608REEL	C20004736M160
R807AFx		nsp	NN05472610	R,CHIP THICK	4.7K-J,1/16W-1608REEL	C20004726M160
R808AFx		nsp	NN05562610	R,CHIP THICK	5.6K-J,1/16W-1608REEL	C20005626M160
R809AFx		nsp	NN05103610	R,CHIP THICK	10K-J,1/16W-1608REEL	C20001036M160
R810AFx		nsp	NN05103610	R,CHIP THICK	10K-J,1/16W-1608REEL	C20001036M160
R811AFx		nsp	NN05331610	R,CHIP THICK	330-J,1/16W-1608REEL	C20003316M160
R812xx		nsp	NN05392610	R,CHIP THICK	3.9K-J,1/16W-1608REEL	C20003926M160
R812SW		nsp	*NN000470R	R,CHIP THICK	2.4K-J,1/16W-1608REEL	C20002426M160
R813xx		nsp	NN05392610	R,CHIP THICK	3.9K-J,1/16W-1608REEL	C20003926M160
R813SW		nsp	*NN000470R	R,CHIP THICK	2.4K-J,1/16W-1608REEL	C20002426M160
R814xx		nsp	NN05472610	R,CHIP THICK	4.7K-J,1/16W-1608REEL	C20004726M160
R814SW		nsp	*NN000480R	R,CHIP THICK	7.5K-J,1/16W-1608REEL	C20007526M160
R815xx		nsp	NN05472610	R,CHIP THICK	4.7K-J,1/16W-1608REEL	C20004726M160
R815SW		nsp	*NN000480R	R,CHIP THICK	7.5K-J,1/16W-1608REEL	C20007526M160
R816xx		nsp	NN05102610	R,CHIP THICK	1K-J,1/16W-1608REEL	C20001026M160
R816SW		nsp	NN05821610	R,CHIP THICK	820-J,1/16W-1608REEL	C20008216M160
R817xx		nsp	NN05102610	R,CHIP THICK	1K-J,1/16W-1608REEL	C20001026M160
R817SW		nsp	NN05821610	R,CHIP THICK	820-J,1/16W-1608REEL	C20008216M160
R818xx		nsp	NN05471610	R,CHIP THICK	470-J,1/16W-1608REEL	C20004716M160
R819xx		nsp	NN05473610	R,CHIP THICK	47K-J,1/16W-1608REEL	C20004736M160
R820SW		nsp	NN05392610	R,CHIP THICK	3.9K-J,1/16W-1608REEL	C20003926M160
R821xx		nsp	NN05000610	R,CHIP THICK	0-J,1/16W-1608REEL	C20000006M160
R821SW		nsp	NN05182610	R,CHIP THICK	1.8K-J,1/16W-1608REEL	C20001826M160
R822xx		nsp	NN05151610	R,CHIP THICK	150-J,1/16W-1608REEL	C20001516M160
R823xx		nsp	NN05104610	R,CHIP THICK	100K-J,1/16W-1608REEL	C20001046M160
R824xx		nsp	NN05222610	R,CHIP THICK	2.2K-J,1/16W-1608REEL	C20002226M160
T1		*LC107290R	*LC107290R	COIL,CHOKE	COIL TRANS MATCHING	D300010250000

NOTE : "nsp" PART IS LISTED FOR REFERENCE ONLY, MARANTZ WILL NOT SUPPLY THESE PARTS.

POS. NO	VERS. COLOR	PART NO. (FOR EUR)	PART NO. (MJI)	DESCRIPTION		
WIRE701		nsp	nsp	CN,WIRE	160MM/1P B1813TOP-2=B1813TOP-2GRN1015#18	L000161010010
XTAL701		*JX000970R	*JX000970R	CRYSTAL	12.288MHZ,HC49U CL=20pF STRIGHT LEAD/REEL	E80012R288070
				FRONT PCB		
FIP301		*HQ300570R	*HQ300570R	DISPLAY,FLT	HNA-15MM25 130*33.5 GRN,ORG /R963	K530152500010
-		nsp	nsp	HOLDER	D-M2(L)ABS BK/FLT	4320210091010
VOL301		*SR000200R	*SR000200R	SW,ENCODER	EC16B24T01D4-ZZZ	G121162401400
JACK301		*YT002830R	*YT002830R	TER,RCA 3PIN	JACK RCA 3P(FRONT-YWR)/JC03W0191G	G606040320000
C301		nsp	OA47601050	CAP,E.GENERIC	47μF/10V(M) 5X11,P=5(LUXON-GR) 85,2000H	N211247028110
C302		nsp	nsp	C,CERAMIC HIK AXIAL	F0.022μF-Z/25V-52RE	D005223594520
C303		nsp	nsp	C,CERAMIC HIK AXIAL	F0.047μF-Z/50V-52RE	D005473597520
C304		nsp	nsp	C,CERAMIC HIK AXIAL	B100pF-K/50V-52RE	D005101177520
C305		nsp	OA10605020	CAP,E.GENERIC	10μF/50V(M) 5x11,P=5(LUXON-GR) 85,2000H	N211210078110
C306		nsp	nsp	C,CERAMIC HIK AXIAL	F0.047μF-Z/50V-52RE	D005473597520
C307		nsp	OA10605020	CAP,E.GENERIC	10μF/50V(M) 5x11,P=5(LUXON-GR) 85,2000H	N211210078110
C308		nsp	nsp	C,CERAMIC HIK AXIAL	F0.022μF-Z/25V-52RE	D005223594520
C309		nsp	nsp	C,CERAMIC HIK AXIAL	B100pF-K/50V-52RE	D005101177520
C310		nsp	nsp	C,CERAMIC HIK AXIAL	F0.047μF-Z/50V-52RE	D005473597520
C311		nsp	nsp	C,CERAMIC HIK AXIAL	B100pF-K/50V-52RE	D005101177520
C312		nsp	nsp	C,CERAMIC HIK AXIAL	B100pF-K/50V-52RE	D005101177520
C313		nsp	OA10605020	CAP,E.GENERIC	10μF/50V(M) 5x11,P=5(LUXON-GR) 85,2000H	N211210078110
C314		nsp	OA10605020	CAP,E.GENERIC	10μF/50V(M) 5x11,P=5(LUXON-GR) 85,2000H	N211210078110
C315		nsp	nsp	C,CERAMIC HIK AXIAL	B820pF-K/50V-52RE	D005821287520
C316		nsp	nsp	C,CERAMIC HIK AXIAL	B820pF-K/50V-52RE	D005821287520
C317		nsp	OA10605020	CAP,E.GENERIC	10μF/50V(M) 5x11,P=5(LUXON-GR) 85,2000H	N211210078110
C318						
⟆		nsp	nsp	C,CERAMIC HIK AXIAL	B100pF-K/50V-52RE	D005101177520
C321						
C322		nsp	nsp	C,CERAMIC HIK AXIAL	F0.1μF-Z/50V-52RE	D005104597530
C323		nsp	nsp	C,CERAMIC HIK AXIAL	F0.1μF-Z/50V-52RE	D005104597530
CNT301		nsp	nsp	CN,WIRE	450/9 B2011-9=GILS-3,2,4 WH2547#26+BK1533#26	L000451090030
CNT303		nsp	nsp	CN,WIRE	100MM/4P 9073-04=9073-04 WH1007#26	L000101040060
CNT304		nsp	nsp	CN,WIRE	470MM/5P GILS-5=9073-5 WH1007#26	L000471050010
CNT305		nsp	nsp	CN,WIRE	80/3P GILS-03=9073-03 RD1007#26	L000800030030
D301		nsp	*HD201720R	D,SWITCHING	1N4148-52RE 75V 150MA DO-34 (MIC)	K000414803520
D315		*HI101020R	*HI101020R	LED,ROUND	LED SLR-34URCF25	K500032101120
D316M		*HI101020R	*HI101020R	LED,ROUND	LED SLR-34URCF25	K500032101120
D317		nsp	*HD201720R	D,SWITCHING	1N4148-52RE 75V 150MA DO-34 (MIC)	K000414803520
D318		*HI101020R	*HI101020R	LED,ROUND	LED SLR-34URCF25	K500032101120
D319		*HI101020R	*HI101020R	LED,ROUND	LED SLR-34URCF25	K500032101120
D320		*HI101020R	*HI101020R	LED,ROUND	LED SLR-34URCF25	K500032101120
D328		*HD301990R	*HD301990R	D,ZENER	MTZJ11B-0.5W/5MA-52MM	K06011R044520
D332						
⟆		nsp	*HD201720R	D,SWITCHING	1N4148-52RE 75V 150MA DO-34 (MIC)	K000414803520
D337						
FPC101B		nsp	nsp	CN,FPC 1.25MM	52492-2320 23P BOTTOM ENTRY	L131524922320
IC301		*HC107290R	*HC107290R	IC,LINEAR-DRIVER	LC75721E/QIP64	J127757210010
J301						
⟆		nsp	nsp	CN,WIRE 1P	JUMPER (0.6/52MM)	L045084006040
J341						
JACK381		*YT002530R	*YT002530R	JACK,D6.5	C40160250N	G402041810000
L302		nsp	nsp	COIL,FILTER-INDUCTOR	10UH-Q40/24M-R2.5-52RE 02TB	D330100700520
Q301		*BA001190R	*BA001190R	SEMI,BRT/NPN RC	KRC107M,0.4W/TO92M-REEL	J6020107M0010
Q302		*BA001200R	*BA001200R	SEMI,BRT/PNP RA	KRA111M,0.4W/TO92M-REEL	J6000111M0010
Q303M						
⟆		*BA001190R	*BA001190R	SEMI,BRT/NPN RC	KRC107M,0.4W/TO92M-REEL	J6020107M0010
Q308						
Q309		*HT700050R	*HT700050R	SEMI,TR/GE NPN 2SC	KTC3200BL,0.6W/TO92-REEL	J5023200B0050
R301		nsp	nsp	R,CARBON FILM	68K-J,1/5W-52RE-AX	C00006836P520
R302		nsp	nsp	R,CARBON FILM	68K-J,1/5W-52RE-AX	C00006836P520
R303		nsp	nsp	R,CARBON FILM	330-J,1/5W-52RE-AX	C00003316P520
R304		nsp	nsp	R,CARBON FILM	100-J,1/5W-52RE	C00001016P520
R305		nsp	nsp	R,CARBON FILM	120-J,1/5W-52RE-AX	C00001216P520
R306		nsp	nsp	R,CARBON FILM	150-J,1/5W-52RE-AX	C00001516P520

NOTE : "nsp" PART IS LISTED FOR REFERENCE ONLY, MARANTZ WILL NOT SUPPLY THESE PARTS.

SR5300

POS. NO	VERS. COLOR	PART NO. (FOR EUR)	PART NO. (MJI)	DESCRIPTION		
R307		nsp	nsp	R,CARBON FILM	150-J,1/5W-52RE-AX	C00001516P520
R308		nsp	nsp	R,CARBON FILM	270-J,1/5W-52RE-AX	C00002716P520
R309		nsp	nsp	R,CARBON FILM	270-J,1/5W-52RE-AX	C00002716P520
R310		nsp	nsp	R,CARBON FILM	470-J,1/5W-52RE-AX	C00004716P520
R311		nsp	nsp	R,CARBON FILM	820-J,1/5W-52RE-AX	C00008216P520
R312		nsp	nsp	R,CARBON FILM	1K-J,1/5W-52RE-AX	C00001026P520
R313		nsp	nsp	R,CARBON FILM	120-J,1/5W-52RE-AX	C00001216P520
R314		nsp	nsp	R,CARBON FILM	150-J,1/5W-52RE-AX	C00001516P520
R315		nsp	nsp	R,CARBON FILM	150-J,1/5W-52RE-AX	C00001516P520
R316		nsp	nsp	R,CARBON FILM	270-J,1/5W-52RE-AX	C00002716P520
R317		nsp	nsp	R,CARBON FILM	270-J,1/5W-52RE-AX	C00002716P520
R318		nsp	nsp	R,CARBON FILM	470-J,1/5W-52RE-AX	C00004716P520
R319		nsp	nsp	R,CARBON FILM	820-J,1/5W-52RE-AX	C00008216P520
R322		nsp	nsp	R,CARBON FILM	1K-J,1/5W-52RE-AX	C00001026P520
R323		nsp	nsp	R,CARBON FILM	270-J,1/5W-52RE-AX	C00002716P520
R325		nsp	nsp	R,CARBON FILM	150-J,1/5W-52RE-AX	C00001516P520
R326		nsp	nsp	R,CARBON FILM	270-J,1/5W-52RE-AX	C00002716P520
R327		nsp	nsp	R,CARBON FILM	270-J,1/5W-52RE-AX	C00002716P520
R328		nsp	nsp	R,CARBON FILM	470-J,1/5W-52RE-AX	C00004716P520
R329		nsp	nsp	R,CARBON FILM	820-J,1/5W-52RE-AX	C00008216P520
R330		nsp	nsp	R,CARBON FILM	1.5K-J,1/5W-52RE-AX	C00001526P520
R332		nsp	nsp	R,CARBON FILM	1K-J,1/5W-52RE-AX	C00001026P520
R333		nsp	nsp	R,CARBON FILM	10K-J,1/5W-52RE-AX	C00001036P520
R334		nsp	nsp	R,CARBON FILM	1K-J,1/5W-52RE-AX	C00001026P520
R335		nsp	nsp	R,CARBON FILM	1K-J,1/5W-52RE-AX	C00001026P520
R336		nsp	nsp	R,CARBON FILM	1K-J,1/5W-52RE-AX	C00001026P520
R337M		nsp	nsp	R,CARBON FILM	330-J,1/5W-52RE-AX	C00003316P520
R338		nsp	nsp	R,CARBON FILM	1K-J,1/5W-52RE-AX	C00001026P520
R340		nsp	nsp	R,CARBON FILM	330-J,1/5W-52RE-AX	C00003316P520
R341		nsp	nsp	R,CARBON FILM	330-J,1/5W-52RE-AX	C00003316P520
R342		nsp	nsp	R,CARBON FILM	47K-J,1/5W-52RE-AX	C00004736P520
R343		nsp	nsp	R,CARBON FILM	75-J,1/5W-52RE-AX	C00007506P520
R344		nsp	nsp	R,CARBON FILM	75-J,1/5W-52RE-AX	C00007506P520
R345		nsp	nsp	R,CARBON FILM	75-J,1/5W-52RE-AX	C00007506P520
R346		nsp	nsp	R,CARBON FILM	47K-J,1/5W-52RE-AX	C00004736P520
R347		nsp	nsp	R,CARBON FILM	470-J,1/5W-52RE-AX	C00004716P520
R348		nsp	nsp	R,CARBON FILM	100K-J,1/5W-52RE-AX	C00001046P520
R349		nsp	nsp	R,CARBON FILM	10K-J,1/5W-52RE-AX	C00001036P520
R350		nsp	nsp	R,CARBON FILM	100K-J,1/5W-52RE-AX	C00001046P520
R351		nsp	nsp	R,CARBON FILM	47K-J,1/5W-52RE-AX	C00004736P520
R352		nsp	nsp	R,CARBON FILM	470-J,1/5W-52RE-AX	C00004716P520
R353		nsp	nsp	R,CARBON FILM	2.2K-J,1/5W-52RE-AX	C00002226P520
R354		nsp	nsp	R,CARBON FILM	330-J,1/5W-52RE-AX	C00003316P520
R355M						
ʃ		nsp	nsp	R,CARBON FILM	24K-J,1/5W-52RE-AX	C00002436P520
R359						
R360		nsp	nsp	R,CARBON FILM	330-J,1/5W-52RE-AX	C00003316P520
RMC301		*HW100630R	*HW100630R	MODULE,REMOCON	RPM7136-H4 36.0KHZ	E940713640000
SILD		nsp	nsp	SUPPORTER	SPTE 0.2t / FRONT GND	4070210266000
SW301						
ʃ		*SP000900R	*SP000900R	SW,TACT	SKHV10920A,5MM/260G-REEL	G180000270010
SW324						
				INPUT1 PCB		
C417						
ʃ	/A/K/N	nsp	nsp	C,CERAMIC HIK AXIAL	B100pF-K/50V-52RE	D005101177520
C432						
C435						
ʃ		nsp	OA47505020	CAP.E.GENERIC	4.7μF/50V(M) 5x11,P=5(LUXON-GR) 85,2000H	N211247978110
C438						
C439		nsp	OA10505020	CAP.E.GENERIC	1μF/50V(M) 5x11,P=5(LUXON-GR) 85,2000H	N211210978110
C440		nsp	OA10505020	CAP.E.GENERIC	1μF/50V(M) 5x11,P=5(LUXON-GR) 85,2000H	N211210978110

NOTE : "nsp" PART IS LISTED FOR REFERENCE ONLY, MARANTZ WILL NOT SUPPLY THESE PARTS.

SR5300

POS. NO	VERS. COLOR	PART NO. (FOR EUR)	PART NO. (MJI)	DESCRIPTION		
C441						
ʃ		nsp	OA47505020	CAP.E.GENERIC	4.7μF/50V(M) 5x11,P=5(LUXON-GR) 85,2000H	N211247978110
C444						
C445		nsp	nsp	C,CERAMIC HIK AXIAL	B100pF-K/50V-52RE	D005101177520
C446		nsp	nsp	C,CERAMIC HIK AXIAL	B100pF-K/50V-52RE	D005101177520
C447		nsp	nsp	C,CERAMIC HIK AXIAL	B100pF-K/50V-52RE	D005101177520
C498		nsp	nsp	C,CERAMIC HIK AXIAL	F0.1μF-Z/50V-52RE	D005104597530
C499		nsp	nsp	C,CERAMIC HIK AXIAL	F0.1μF-Z/50V-52RE	D005104597530
CN301I		nsp	nsp	CN,WAFER 2.0MM	G1L-S-3P-S2T2-EF	L101220030000
CP110		nsp	nsp	CN,WAFER 2.0MM	TUC-P10X-B1 BD-TO-BD 10P(35237-10)	L101100031010
CP111		nsp	nsp	CN,WAFER 2.0MM	TUC-P16X-B1 BD-TO-BD 16P(35237-16)	L101100031610
IC401		*HC107320R	*HC107320R	IC,LOGIC	TC9274N-011 SDIP42-P-600 /ANLOG SW	J040927400030
IC403		HC10053090	HC10053090	IC,LINEAR OP	NJM2068DD-DIP8P	J121206800000
IC404		HC10053090	HC10053090	IC,LINEAR OP	NJM2068DD-DIP8P	J121206800000
J418		nsp	nsp	CN,WIRE 1P	JUMPER (0.6/52MM)	L045084006040
J419						
ʃ		nsp	nsp	CN,WIRE 1P	JUMPER (0.6/52MM)	L045084006040
J472						
JACK401		*YT001600R	*YT001600R	TER,RCA 4PIN	DAERYUNG/JK0400450N	G602040045000
JACK402		*YT002640R	*YT002640R	TER,RCA 6PIN	DAERYUNG/JK060046CN(+2GND	G603060046020
JACK403		*YT002640R	*YT002640R	TER,RCA 6PIN	DAERYUNG/JK060046CN(+2GND	G603060046020
R433						
ʃ		nsp	nsp	R,CARBON FILM	470-J,1/5W-52RE-AX	C00004716P520
R449						
R466		nsp	nsp	R,CARBON FILM	150-J,1/5W-52RE-AX	C00001516P520
R467		nsp	nsp	R,CARBON FILM	4.7-J,1/5W-52RE-AX	C0004R706P520
R468		nsp	nsp	R,CARBON FILM	150-J,1/5W-52RE-AX	C00001516P520
R469		nsp	nsp	R,CARBON FILM	150-J,1/5W-52RE-AX	C00001516P520
R470		nsp	nsp	R,CARBON FILM	150-J,1/5W-52RE-AX	C00001516P520
R471						
ʃ		nsp	nsp	R,CARBON FILM	470K-J,1/5W-52RE-AX	C00004746P520
R474						
R475		nsp	nsp	R,CARBON FILM	4.7-J,1/5W-52RE-AX	C0004R706P520
R481						
ʃ		nsp	nsp	R,CARBON FILM	470K-J,1/5W-52RE-AX	C00004746P520
R484						
R487						
ʃ		nsp	nsp	R,CARBON FILM	150-J,1/5W-52RE-AX	C00001516P520
R490						
R495						
ʃ		nsp	nsp	R,CARBON FILM	470K-J,1/5W-52RE-AX	C00004746P520
R498						
R503		nsp	nsp	R,CARBON FILM	1K-J,1/5W-52RE-AX	C00001026P520
R504		nsp	nsp	R,CARBON FILM	1K-J,1/5W-52RE-AX	C00001026P520
R505		nsp	nsp	R,CARBON FILM	1K-J,1/5W-52RE-AX	C00001026P520
				INPUT2 PCB		
C448						
ʃ	/A/K/N	nsp	nsp	C,CERAMIC HIK AXIAL	B100pF-K/50V-52RE	D005101177520
C453						
C462		nsp	nsp	C,CERAMIC HIK AXIAL	Y0.01μF-M/16V-52RE	D005103773530
C463A		nsp	nsp	C,CERAMIC HIK AXIAL	F0.1μF-Z/50V-52RE	D005104597530
C468		nsp	nsp	C,CERAMIC HIK AXIAL	F0.1μF-Z/50V-52RE	D005104597530
C599		nsp	nsp	C,CERAMIC HIK AXIAL	F0.1μF-Z/50V-52RE	D005104597530
CP112		nsp	nsp	CN,WAFER 2.0MM	TUC-P14X-B1 BD-TO-BD 14P(35237-14)	L101100031410
D501		nsp	*HD201720R	D,SWITCHING	1N4148-52RE 75V 150MA DO-34 (MIC)	K000414803520
D502		nsp	*HD201720R	D,SWITCHING	1N4148-52RE 75V 150MA DO-34 (MIC)	K000414803520
J465						
ʃ		nsp	nsp	CN,WIRE 1P	JUMPER (0.6/52MM)	L045084006040
J520						
JACK501		*YT002640R	*YT002640R	TER,RCA 6PIN	DAERYUNG/JK060046CN(+2GND	G603060046020
JACK502		*YT002600R	*YT002600R	TER,RCA 2PIN	DAERYUNG/JK020044HN	G601020044300

NOTE : "nsp" PART IS LISTED FOR REFERENCE ONLY, MARANTZ WILL NOT SUPPLY THESE PARTS

POS. NO	VERS. COLOR	PART NO. (FOR EUR)	PART NO. (MJI)	DESCRIPTION		
R448A						
⟆		nsp	nsp	R,CARBON FILM	470K-J,1/5W-52RE-AX	C00004746P520
R453A						
R517						
⟆		nsp	nsp	R,CARBON FILM	470-J,1/5W-52RE-AX	C00004716P520
R522						
R535		nsp	nsp	R,CARBON FILM	47-J,1/5W-52RE-AX	C00004706P520
				ST/BY LED PCB		
D303		*HI101020R	*HI101020R	LED,ROUND	LED SLR-34URCF25	K500032101120
				ST-BY SW PCB		
J320						
⟆	/U	nsp	nsp	CN,WIRE 1P	JUMPER (0.6/52MM)	L045084006040
J323						
SW325	/U	nsp	*SP000900R	SW,TACT	SKHV10920A,5MM/260G-REEL	G180000270010
				POWER SW PCB		
CNT401	/A/K/N	nsp	nsp	CN,WIRE	500MM 2P 35156-03,JE201-03 BK1617#22 7.92	L000501020020
⚠ SW401	/A/K/N	*SP001160R	*SP001160R	SW,PUSH	SDDL-005-S	G000122006030
				MULTI-CONTROL PCB		
C371		nsp	nsp	C,CERAMIC HIK AXIAL	B820pF-K/50V-52RE	D005821287520
C372		nsp	nsp	C,CERAMIC HIK AXIAL	B820pF-K/50V-52RE	D005821287520
CN305		nsp	nsp	CN,WAFER 2.0MM	GIL-S-03P-S2L2-EF	L101220030010
MVOL302		*SR000190R	*SR000190R	SW,ENCODER	EC16B12S00D4-ZZZ 12PULSE/360'	G121161200010
				H/P PCB		
C464						
⟆		nsp	nsp	C,CERAMIC HIK AXIAL	Y0.01μF-M/16V-52RE	D005103773530
C467						
CNT122B		nsp	nsp	CN,WIRE	570MM/4P 5264-04=51088-04 RD1007#22	L000571040010
JACK404		*YJ002580R	*YJ002580R	JACK,D6.5	JACK PHONE 9P H20980060G	G402041940010
R536		nsp	nsp	R,METAL FILM 100PPM	RES MF 330 2W 5%	C060033166520
R537		nsp	nsp	R,METAL FILM 100PPM	RES MF 330 2W 5%	C060033166520
WIRE401		nsp	nsp	RING,TER WIRE	200MM/1P 61640BS-2(PI3.2)=B1812TOP-2 BK	8410201010030
				VOLTAGE SEL PCB		
-	/K	nsp	nsp	SUPPORTER	AVR1601(KE2) KIFCO(PS801) /P.C.	4070210192000
-	/K	nsp	nsp	SPACER	AVC1500(N) NYLON66 MPS-10-0/CARD	4300210062000
CN951	/K	nsp	nsp	CN,WAFER 3.96MM	35328-0510	L104353280500
CN953	/K	nsp	nsp	CN,WAFER 7.92MM	35979-0320 3P ANGLE	L108359790320
CNT711	/K	nsp	nsp	CN,WIRE	120MM/2P 35191-02=210-03 BK1617#22 7.92	L000121020050
⚠ F913	/K	nsp	*FS000960R	FUSE GLASS 20MM	T6.3A /250V-SVBRTC(K) 218	N751226301110
F913A	/K	nsp	nsp	HOLDER,FUSE CLIP	PI5.2-REEL	G645000050010
F913B	/K	nsp	nsp	HOLDER,FUSE CLIP	PI5.2-REEL	G645000050010
J901						
⟆	/K	nsp	nsp	CN,WIRE 1P	JUMPER (0.6/52MM)	L045084006040
J907						
⚠ JK912	/K	nsp	*SS000720R	SW,SLIDE	3C2P,ESD26832A AC250V/5A	G060268320010
				MAIN PCB		
-	/U	nsp	nsp	P.C.B	SR6300/U 330*247 1.6T FR1 /MAIN	7020061860000
BEAD101						
⟆		*FC500010R	*FC500010R	BEAD,COIL	BAS3580T0 3.5PHI*8 52RE	7610035800020
BEAD105						
C135						
⟆		nsp	nsp	C,CERAMIC HIK AXIAL	F0.1μF-Z/50V-52RE	D005104597530
C148						
C148A		nsp	nsp	C,CERAMIC HIK AXIAL	B0.001μF-K/50V-52RE	D005102177530
C152		nsp	nsp	C,CERAMIC HIK AXIAL	B100pF-K/50V-52RE	D005101177520
C153	/A/N	nsp	nsp	C,CERAMIC HIK AXIAL	F0.1μF-Z/50V-52RE	D005104597530
C157	/A/N	nsp	nsp	C,CERAMIC HIK AXIAL	B270pF-K/50V-52RE	D005271277520

NOTE : "nsp" PART IS LISTED FOR REFERENCE ONLY, MARANTZ WILL NOT SUPPLY THESE PARTS.

POS. NO	VERS. COLOR	PART NO. (FOR EUR)	PART NO. (MJI)	DESCRIPTION		
C160						
⟆		nsp	nsp	C,CERAMIC HIK AXIAL	B100pF-K/50V-52RE	D005101177520
C163						
C164		nsp	nsp	C,CERAMIC HIK AXIAL	B220pF-K/50V-52RE	D005221277520
C164A		nsp	nsp	C,CERAMIC HIK AXIAL	F0.1μF-Z/50V-52RE	D005104597530
C169						
⟆		nsp	nsp	C,CERAMIC HIK AXIAL	F0.047μF-Z/50V-52RE	D005473597520
C173						
C116		nsp	nsp	C,CERAMIC HIK DISC	B0.01μF-K/50V-5RE	D004103277050
C124		nsp	nsp	C,CERAMIC HIK DISC	B0.01μF-K/50V-5RE	D004103277050
C159	/A/N	nsp	nsp	C,CERAMIC SEMI DISC	F0.1μF-Z/50V-5RE PI6	D006104597050
C154	/A/N	nsp	nsp	C,CERAMIC T.C DISC	CH27pF-J/50V-5RE	D000270167050
C155	/A/N	nsp	nsp	C,CERAMIC T.C DISC	CH27pF-J/50V-5RE	D000270167050
C114		*EX000130R	*EX000130R	C,ELECT GE 85C	2200μF-M/35V,18*35.5 BULK(SNAPIN) SAGUB	D040222085240
C115		*EX000130R	*EX000130R	C,ELECT GE 85C	2200μF-M/35V,18*35.5 BULK(SNAPIN) SAGUB	D040222085240
C117		*EX000100R	*EX000100R	C,ELECT GE 85C	10000μF-M/16V,18*35L BLK SY	D040104083000
C118		*EX000120R	*EX000120R	C,ELECT GE 85C	2200μF-M/16V,12.5*20	D040222083210
C119		*EX000110R	*EX000110R	C,ELECT GE 85C	10000μF-M/63V,35*60 BULK(SNAPIN) SAGUB	D040103088390
C120		*EX000110R	*EX000110R	C,ELECT GE 85C	10000μF-M/63V,35*60 BULK(SNAPIN) SAGUB	D040103088390
C151		*EX000080R	*EX000080R	C,ELECT GE 85C	8200μF-M/5.5V SY	D040822080010
C101		*OF100250R	*OF100250R	C,FILM POLYESTER	RED-0.1μF-K/250V-5RE	D02010407H080
C102		*OF100300R	*OF100300R	C,FILM POLYESTER	ST-0.047μF-J/100V-5RE	D02047306C060
C103		*OF100300R	*OF100300R	C,FILM POLYESTER	ST-0.047μF-J/100V-5RE	D02047306C060
C104xx		*OF100260R	*OF100260R	C,FILM POLYESTER	RED-0.1μF-K/63V-5RE	D020104078060
C105xx		*OF100260R	*OF100260R	C,FILM POLYESTER	RED-0.1μF-K/63V-5RE	D020104078060
C106		*OF100250R	*OF100250R	C,FILM POLYESTER	RED-0.1μF-K/250V-5RE	D02010407H080
C107		*OF100250R	*OF100250R	C,FILM POLYESTER	RED-0.1μF-K/250V-5RE	D02010407H080
C108		*OF100300R	*OF100300R	C,FILM POLYESTER	ST-0.047μF-J/100V-5RE	D02047306C060
⟆						
C111		*OF100300R	*OF100300R	C,FILM POLYESTER	ST-0.047μF-J/100V-5RE	D02047306C060
C122						
C123		*OF100250R	*OF100250R	C,FILM POLYESTER	RED-0.1μF-K/250V-5RE	D02010407H080
C121		nsp	OA10605020	CAP.E.GENERIC	10μF/50V(M) 5x11,P=5(LUXON-GR) 85,2000H	N211210078110
C125						
⟆		nsp	OA10505020	CAP.E.GENERIC	1μF/50V(M) 5x11,P=5(LUXON-GR) 85,2000H	N211210978110
C129						
C132		nsp	OA10702520	CAP.E.GENERIC	100μF/25V(M) 6.3x11,P=5(LUXON-GR) 85,2000H	N211210148110
C140		nsp	OA47505020	CAP.E.GENERIC	4.7μF/50V(M) 5x11,P=5(LUXON-GR) 85,2000H	N211247978110
C141		nsp	OA47701620	CAP.E.GENERIC	470μF/16V(M) 8x11,P=5(LUXON-GR) 85,2000H	N211247138110
C142		nsp	OA47701620	CAP.E.GENERIC	470μF/16V(M) 8x11,P=5(LUXON-GR) 85,2000H	N211247138110
C145		nsp	OA10610020	CAP.E.GENERIC	10μF/100V(M) 6.3x11,P=5(LUXON-GR) 85,2000H	N2112100C8110
C146		nsp	OA47601640	CAP.E.GENERIC	47μF/16V(M) 5x11,P=5(LUXON-GR) 85,2000H	N211247038110
C149		nsp	OA47505020	CAP.E.GENERIC	4.7μF/50V(M) 5x11,P=5(LUXON-GR) 85,2000H	N211247978110
C150		nsp	OA47601640	CAP.E.GENERIC	47μF/16V(M) 5x11,P=5(LUXON-GR) 85,2000H	N211247038110
C156	/A/N	nsp	OA10605020	CAP.E.GENERIC	10μF/50V(M) 5x11,P=5(LUXON-GR) 85,2000H	N211210078110
C158	/A/N	nsp	OA47601640	CAP.E.GENERIC	47μF/16V(M) 5x11,P=5(LUXON-GR) 85,2000H	N211247038110
C174		nsp	OA22702520	CAP.E.GENERIC	220μF/25V(M) 8x11,P=5(LUXON-GR) 85,2000H	N211222148110
CN101		nsp	nsp	CN,WAFER 2.5MM	5267-06A 6P	L102526700600
CN102		nsp	nsp	CN,WAFER 3.96MM	35328-0310	L104353280300
CN103		nsp	nsp	CN,WAFER 2.5MM	5267-04A 4P	L102526700400
CN104		nsp	nsp	CN,WAFER 2.5MM	5267-10A 10P	L102526701000
CN105		nsp	nsp	CN,WAFER 2.5MM	5267-09A 9P	L102526700900
CN107		nsp	nsp	CN,WAFER 2.5MM	PLUG BD,BD 53421-1317 13P 2.5 ST ZIP	L102534211310
CN108		nsp	nsp	CN,WAFER 2.0MM	TUC-P20P-B1 BD-TO-BD 20P (35336-20)	L101100042010
CN109		nsp	nsp	CN,WAFER 2.0MM	TUC-P20P-B1 BD-TO-BD 20P (35336-20)	L101100042010
CN110		nsp	nsp	CN,WAFER 2.0MM	TUC-P10P-B1 BD-TO-BD 10P (35336-10)	L101100041010
CN111		nsp	nsp	CN,WAFER 2.0MM	TUC-P16P-B1 BD-TO-BD 16P (35336-16)	L101100041610
CN112		nsp	nsp	CN,WAFER 2.0MM	TUC-P14P-B1 BD-TO-BD 14P (35336-14)	L101100041410
CN113		nsp	nsp	CN,WAFER 2.0MM	TUC-P14P-B1 BD-TO-BD 14P (35336-14)	L101100041410
CN114		nsp	nsp	CN,WAFER 2.0MM	TUC-P16P-B1 BD-TO-BD 16P (35336-16)	L101100041610
CN115		nsp	nsp	CN,WAFER 2.0MM	TUC-P18P-B1 BD-TO-BD 18P (35336-18)	L101100041810
CN116		nsp	nsp	CN,WAFER 2.0MM	TUC-P16P-B1 BD-TO-BD 16P (35336-16)	L101100041610
CN117		nsp	nsp	CN,WAFER 2.0MM	TUC-P20P-B1 BD-TO-BD 20P (35336-20)	L101100042010
CN118		nsp	nsp	CN,WAFER 2.0MM	35336-1310 13P	L101353361310

NOTE : "nsp" PART IS LISTED FOR REFERENCE ONLY, MARANTZ WILL NOT SUPPLY THESE PARTS.

SR5300

POS. NO	VERS. COLOR	PART NO. (FOR EUR)	PART NO. (MJI)	DESCRIPTION		
CNT119		nsp	nsp	CN,WIRE	420MM/4P GIL-S-4=9073-4 WH1007#26	L000421040010
D101						
∫		nsp	*HD201570R	D,SWITCHING	IN4007 52REEL 1000V 1A	K000400700520
D105						
D106		*HE200300R	*HE200300R	D,RECTIFIER BRIDGE	KBPC604 6A	K047604000020
D107		*HE200300R	*HE200300R	D,RECTIFIER BRIDGE	KBPC604 6A	K047604000020
D108		nsp	*HD201570R	D,SWITCHING	IN4007 52REEL 1000V 1A	K000400700520
D109		nsp	*HD201570R	D,SWITCHING	IN4007 52REEL 1000V 1A	K000400700520
D110		nsp	*HD201720R	D,SWITCHING	1N4148-52RE 75V 150MA DO-34 (MIC)	K000414803520
D110A		nsp	*HD201720R	D,SWITCHING	1N4148-52RE 75V 150MA DO-34 (MIC)	K000414803520
D111		nsp	*HD201570R	D,SWITCHING	IN4007 52REEL 1000V 1A	K000400700520
D112						
∫		nsp	*HD201720R	D,SWITCHING	1N4148-52RE 75V 150MA DO-34 (MIC)	K000414803520
D129						
FPC101		*YU000930R	*YU000930R	CABLE FLAT CARD	FPC23P FPC101A&FPC101B	L301241230010
FPC101A		nsp	nsp	CN,FPC 1.25MM	8370-231 23P ST	L131837002300
GND101						
∫		nsp	nsp	TERMINAL	ALL PBST/GND PLATE-REEL	3790040876010
GND107						
IC101		HC38915090	HC38915090	IC,LINEAR-REGULATOR	MC7815CT TO220 (ON SEMI)(METAL TYPE)	J126781500070
IC102		*HC300200R	*HC300200R	IC,LINEAR-REGULATOR	KIA7915PI,20W-TO220IS MOLD	J126791500030
IC103		HC38905090	HC38905090	IC,LINEAR-REGULATOR	MC7805CT TO220 (ON SEMI)(METAL TYPE)	J126780500380
IC104		HC38905090	HC38905090	IC,LINEAR-REGULATOR	MC7805CT TO220 (ON SEMI)(METAL TYPE)	J126780500380
IC105		*HC300190R	*HC300190R	IC,LINEAR-REGULATOR	KIA7905PI,20W-TO220IS MOLD	J126790500070
IC106		*HC400020R	*HC400020R	IC,LOGIC	CD4094BCN DIP16 /8BIT SHIFT REGISTER	J040409400050
IC107		*HU100610R	*HU100610R	IC,CPU	CXP740010-163Q DWP586 QFP100 /SR5300	J020740010163
IC108	/A/N	*HC107330R	*HC107330R	IC,ANALOG	TDA7330BD-SOP20P /RDS DEMODULATOR	J080733000010
J101						
∫		nsp	nsp	CN,WIRE 1P	JUMPER (0.6/52MM)	L045084006040
J300						
Q101		*HT100340R	*HT100340R	SEMI,TR/GE PNP 2SA	KTA1268BL,0.3W/TO92-REEL	J5001268B0050
Q102		*HT700050R	*HT700050R	SEMI,TR/GE NPN 2SC	KTC3200BL,0.6W/TO92-REEL	J5023200B0050
Q103		*HT100340R	*HT100340R	SEMI,TR/GE PNP 2SA	KTA1268BL,0.3W/TO92-REEL	J5001268B0050
Q104		*HT100340R	*HT100340R	SEMI,TR/GE PNP 2SA	KTA1268BL,0.3W/TO92-REEL	J5001268B0050
Q105		*HT700050R	*HT700050R	SEMI,TR/GE NPN 2SC	KTC3200BL,0.6W/TO92-REEL	J5023200B0050
Q106		*HT100340R	*HT100340R	SEMI,TR/GE PNP 2SA	KTA1268BL,0.3W/TO92-REEL	J5001268B0050
Q107		*HT700050R	*HT700050R	SEMI,TR/GE NPN 2SC	KTC3200BL,0.6W/TO92-REEL	J5023200B0050
Q108						
∫		*BA001190R	*BA001190R	SEMI,BRT/NPN RC	KRC107M,0.4W/TO92M-REEL	J6020107M0010
Q113						
Q115		*HT700050R	*HT700050R	SEMI,TR/GE NPN 2SC	KTC3200BL,0.6W/TO92-REEL	J5023200B0050
Q116		*HT700050R	*HT700050R	SEMI,TR/GE NPN 2SC	KTC3200BL,0.6W/TO92-REEL	J5023200B0050
Q117		*HT100340R	*HT100340R	SEMI,TR/GE PNP 2SA	KTA1268BL,0.3W/TO92-REEL	J5001268B0050
Q118		*HT100340R	*HT100340R	SEMI,TR/GE PNP 2SA	KTA1268BL,0.3W/TO92-REEL	J5001268B0050
Q119		*HT700050R	*HT700050R	SEMI,TR/GE NPN 2SC	KTC3200BL,0.6W/TO92-REEL	J5023200B0050
Q120		*HT700050R	*HT700050R	SEMI,TR/GE NPN 2SC	KTC3200BL,0.6W/TO92-REEL	J5023200B0050
Q122		*BA001210R	*BA001210R	SEMI,BRT/PNP RA	KRA102M,0.3W/TO92M-REEL	J6002202M0010
Q123		*BA001180R	*BA001180R	SEMI,BRT/NPN RC	KRC102M,0.4W/TO92M-REEL	J6020102M0010
Q124		*BA001210R	*BA001210R	SEMI,BRT/PNP RA	KRA102M,0.3W/TO92M-REEL	J6002202M0010
Q128		*BA001210R	*BA001210R	SEMI,BRT/PNP RA	KRA102M,0.3W/TO92M-REEL	J6002202M0010
Q129		*BA001180R	*BA001180R	SEMI,BRT/NPN RC	KRC102M,0.4W/TO92M-REEL	J6020102M0010
Q130		*BA001190R	*BA001190R	SEMI,BRT/NPN RC	KRC107M,0.4W/TO92M-REEL	J6020107M0010
Q131						
∫		*BA001420R	*BA001420R	SEMI,BRT/PNP RA	DTA114YS,0.3W/TO92M-REEL	J6000114Y0010
Q135						
Q136		*HT100590R	*HT100590R	SEMI,TR/GE PNP 2SA	KSA992F,0.5W/TO92-REEL	J5000992F0050
R101						
∫		nsp	nsp	R,METAL FILM 100PPM	0.22-J,1W-R.REEL	C060R22065050
R104						
R105xx		nsp	nsp	R,METAL FILM 100PPM	10-J,2W-52RE-AX	C060010066520
R107		nsp	nsp	R,CARBON FILM	2.2K-J,1/5W-52RE-AX	C00002226P520
R108		nsp	nsp	R,CARBON FILM	2.2K-J,1/5W-52RE-AX	C00002226P520
R109		nsp	nsp	R,CARBON FILM	560K-J,1/5W-52RE-AX	C00005646P520
R110		nsp	nsp	R,CARBON FILM	3.6K-J,1/5W-52RE-AX	C00003626P520

NOTE : "nsp" PART IS LISTED FOR REFERENCE ONLY, MARANTZ WILL NOT SUPPLY THESE PARTS

SR5300

POS. NO	VERS. COLOR	PART NO. (FOR EUR)	PART NO. (MJI)	DESCRIPTION		
R111		nsp	nsp	R,CARBON FILM	22K-J,1/5W-52RE-AX	C00002236P520
R112		nsp	nsp	R,CARBON FILM	910-J,1/5W-52RE-AX	C00009116P520
R113		nsp	nsp	R,CARBON FILM	1K-J,1/5W-52RE-AX	C00001026P520
R114		*GO000011R	*GO000011R	R,CEMENT MPR	0.1-J/5W,W14*H17	C144R10069110
R115		*GO000011R	*GO000011R	R,CEMENT MPR	0.1-J/5W,W14*H17	C144R10069110
R116		nsp	nsp	R,CARBON FILM	27K-J,1/5W-52RE-AX	C00002736P520
R117		nsp	nsp	R,CARBON FILM	27K-J,1/5W-52RE-AX	C00002736P520
R118		nsp	nsp	R,CARBON FILM	2.2K-J,1/5W-52RE-AX	C00002226P520
R119		nsp	nsp	R,CARBON FILM	2.2K-J,1/5W-52RE-AX	C00002226P520
R120		nsp	nsp	R,CARBON FILM	560K-J,1/5W-52RE-AX	C00005646P520
R122						
∫		nsp	nsp	R,CARBON FILM	27K-J,1/5W-52RE-AX	C00002736P520
R127						
R128		nsp	nsp	R,CARBON FILM	51K-J,1/5W-52RE-AX	C00005136P520
R129		nsp	nsp	R,CARBON FILM	51K-J,1/5W-52RE-AX	C00005136P520
R130		nsp	nsp	R,CARBON FILM	15K-J,1/5W-52RE-AX	C00001536P520
R131		nsp	nsp	R,CARBON FILM	33K-J,1/5W-52RE-AX	C00003336P520
R133		nsp	nsp	R,CARBON FILM	2.2K-J,1/5W-52RE-AX	C00002226P520
R134		nsp	nsp	R,CARBON FILM	100K-J,1/5W-52RE-AX	C00001046P520
R137						
∫		nsp	nsp	R,CARBON FILM	22K-J,1/5W-52RE-AX	C00002236P520
R142						
R143		nsp	nsp	R,CARBON FILM	3.3K-J,1/5W-52RE-AX	C00003326P520
R144		nsp	nsp	R,CARBON FILM	15K-J,1/5W-52RE-AX	C00001536P520
R146		nsp	nsp	R,METAL FILM 100PPM	1.2K-J,1W-5REEL	C060012265050
R147		nsp	nsp	R,CARBON FILM	22K-J,1/5W-52RE-AX	C00002236P520
R148		nsp	nsp	R,CARBON FILM	22K-J,1/5W-52RE-AX	C00002236P520
R149		nsp	nsp	R,CARBON FILM	1K-J,1/5W-52RE-AX	C00001026P520
R150		nsp	nsp	R,CARBON FILM	18K-J,1/5W-52RE-AX	C00001836P520
R151		nsp	nsp	R,CARBON FILM	1K-J,1/5W-52RE-AX	C00001026P520
R152		nsp	nsp	R,METAL FILM 100PPM	1.2K-J,1W-5REEL	C060012265050
R153		nsp	nsp	R,CARBON FILM	1K-J,1/5W-52RE-AX	C00001026P520
R154		nsp	nsp	R,METAL FILM 100PPM	1.2K-J,1W-5REEL	C060012265050
R155		nsp	nsp	R,CARBON FILM	4.7K-J,1/5W-52RE-AX	C00004726P520
R156		nsp	nsp	R,CARBON FILM	100K-J,1/5W-52RE-AX	C00001046P520
R157		nsp	nsp	R,CARBON FILM	100K-J,1/5W-52RE-AX	C00001046P520
R158		nsp	nsp	R,CARBON FILM	100K-J,1/5W-52RE-AX	C00001046P520
R159		nsp	nsp	R,CARBON FILM	1K-J,1/5W-52RE-AX	C00001026P520
R161		nsp	nsp	R,CARBON FILM	1M-J,1/5W-52RE-AX	C00001056P520
R162		nsp	nsp	R,CARBON FILM	47K-J,1/5W-52RE-AX	C00004736P520
R165		nsp	nsp	R,CARBON FILM	4.7K-J,1/5W-52RE-AX	C00004726P520
R166		nsp	nsp	R,CARBON FILM	47K-J,1/5W-52RE-AX	C00004736P520
R167		nsp	nsp	R,CARBON FILM	10K-J,1/5W-52RE-AX	C00001036P520
R168		nsp	nsp	R,CARBON FILM	47K-J,1/5W-52RE-AX	C00004736P520
R169		nsp	nsp	R,CARBON FILM	220-J,1/5W-52RE-AX	C00002216P520
R170		nsp	nsp	R,CARBON FILM	100K-J,1/5W-52RE-AX	C00001046P520
R171		nsp	nsp	R,CARBON FILM	47K-J,1/5W-52RE-AX	C00004736P520
R172	/A/N	nsp	nsp	R,CARBON FILM	10K-J,1/5W-52RE-AX	C00001036P520
R173	/K	nsp	nsp	R,CARBON FILM	15K-J,1/5W-52RE-AX	C00001536P520
R173	/A/N	nsp	nsp	R,CARBON FILM	4.7K-J,1/5W-52RE-AX	C00004726P520
R173	/U	nsp	nsp	R,CARBON FILM	47K-J,1/5W-52RE-AX	C00004736P520
R174		nsp	nsp	R,CARBON FILM	47K-J,1/5W-52RE-AX	C00004736P520
R175		nsp	nsp	R,CARBON FILM	10K-J,1/5W-52RE-AX	C00001036P520
R176		nsp	nsp	R,CARBON FILM	15K-J,1/5W-52RE-AX	C00001536P520
R177		nsp	nsp	R,CARBON FILM	470K-J,1/5W-52RE-AX	C00004746P520
R178		nsp	nsp	R,CARBON FILM	100-J,1/5W-52RE	C00001016P520
R179		nsp	nsp	R,CARBON FILM	47K-J,1/5W-52RE-AX	C00004736P520
R181		nsp	nsp	R,CARBON FILM	10K-J,1/5W-52RE-AX	C00001036P520
R182	/A/N	nsp	nsp	R,CARBON FILM	2.2M-J,1/5W-52RE-AX	C00002256P520
R183	/K/U	nsp	nsp	R,CARBON FILM	47K-J,1/5W-52RE-AX	C00004736P520
R184		nsp	nsp	R,CARBON FILM	10K-J,1/5W-52RE-AX	C00001036P520
R185		nsp	nsp	R,CARBON FILM	100K-J,1/5W-52RE-AX	C00001046P520
R186		nsp	nsp	R,CARBON FILM	100K-J,1/5W-52RE-AX	C00001046P520
R187	/A/N	nsp	nsp	R,CARBON FILM	47K-J,1/5W-52RE-AX	C00004736P520

NOTE : "nsp" PART IS LISTED FOR REFERENCE ONLY, MARANTZ WILL NOT SUPPLY THESE PARTS

POS. NO	VERS. COLOR	PART NO. (FOR EUR)	PART NO. (MJI)	DESCRIPTION		
R188	/A/N	nsp	nsp	R,CARBON FILM	47K-J,1/5W-52RE-AX	C00004736P520
R189		nsp	nsp	R,CARBON FILM	10K-J,1/5W-52RE-AX	C00001036P520
R190		nsp	nsp	R,CARBON FILM	10K-J,1/5W-52RE-AX	C00001036P520
R191	/A/N	nsp	nsp	R,CARBON FILM	560-J,1/5W-52RE-AX	C00005616P520
R192		nsp	nsp	R,CARBON FILM	47K-J,1/5W-52RE-AX	C00004736P520
R193		nsp	nsp	R,METAL FILM 100PPM	3.3-J,1W-52RE-AX	C0603R3065520
R194						
ʃ		nsp	nsp	R,CARBON FILM	10K-J,1/5W-52RE-AX	C00001036P520
R198						
R199		nsp	nsp	R,CARBON FILM	1K-J,1/5W-52RE-AX	C00001026P520
R200		nsp	nsp	R,CARBON FILM	47K-J,1/5W-52RE-AX	C00004736P520
R202		nsp	nsp	R,METAL FILM 100PPM	100-J;1/4W-R.REEL	C06001063050
RLY101		*LY000290R	*LY000290R	RELAY	RSB24S 24V 2A30VDC /SMALL SIGNAL	G680240202010
RLY102						
ʃ		LY20240490	LY20240490	RELAY	G5PA-28 24V 5A	G680240502020
RLY106						
XTAL101		*FQ000530R	*FQ000530R	RESONATOR,CERAMIC	CST12.0MTW-TF01/REEL CSTLA12M0T55-A0	E830120000050
XTAL102	/A/N	*JX001000R	*JX001000R	CRYSTAL	4.332MHZ;CL=20.8pF HC49U STRIGHT LEAD	E8004R3320080
ZD121		HD30511000	HD30511000	D,ZENER	MTZJ5.1B-0.5W/5MA-52MM	K06005R144520
ZD122		HD30511000	HD30511000	D,ZENER	MTZJ5.1B-0.5W/5MA-52MM	K06005R144520
ZD129	/A/N	HD30511000	HD30511000	D,ZENER	MTZJ5.1B-0.5W/5MA-52MM	K06005R144520
				PROCESSOR PCB		
C515xx		nsp	DD95101300	C,CERAMIC CHIP T.C	COG100pF-J/50V-1608REEL	D010101167160
C528xx		nsp	OA22505020	CAP.E.GENERIC	2.2μF/50V(M) 5x11,P=5(LUXON-GR) 85,2000H	N211222978110
C528SW		nsp	OA47505020	CAP.E.GENERIC	4.7μF/50V(M) 5x11,P=5(LUXON-GR) 85,2000H	N211247978110
C533xx		nsp	DD95101300	C,CERAMIC CHIP T.C	COG100pF-J/50V-1608REEL	D010101167160
C533SW		nsp	DK96122300	C,CERAMIC CHIP HIK	X7R1200pF-K/50V-1608REEL	D011122777160
C541xx		nsp	DD95101300	C,CERAMIC CHIP T.C	COG100pF-J/50V-1608REEL	D010101167160
C543		nsp	DK96104300	C,CERAMIC CHIP HIK	X7R0.1μF-K/50V-1608REEL	D011104577160
C544		nsp	DK96104300	C,CERAMIC CHIP HIK	X7R0.1μF-K/50V-1608REEL	D011104577160
C545xx		nsp	OA47505020	CAP.E.GENERIC	4.7μF/50V(M) 5x11,P=5(LUXON-GR) 85,2000H	N211247978110
C546xx		nsp	OA47505020	CAP.E.GENERIC	4.7μF/50V(M) 5x11,P=5(LUXON-GR) 85,2000H	N211247978110
C552						
ʃ		nsp	DK96104300	C,CERAMIC CHIP HIK	X7R0.1μF-K/50V-1608REEL	D011104577160
C556						
C557						
ʃ		nsp	OA47602520	CAP.E.GENERIC	47μF/25V(M) 5x11,P=5(LUXON-GR) 85,2000H	N211247048110
C560						
C561						
ʃ		nsp	DK96104300	C,CERAMIC CHIP HIK	X7R0.1μF-K/50V-1608REEL	D011104577160
C564						
C565		nsp	OA47602520	CAP.E.GENERIC	47μF/25V(M) 5x11,P=5(LUXON-GR) 85,2000H	N211247048110
C566		nsp	OA47602520	CAP.E.GENERIC	47μF/25V(M) 5x11,P=5(LUXON-GR) 85,2000H	N211247048110
C567		nsp	DK96104300	C,CERAMIC CHIP HIK	X7R0.1μF-K/50V-1608REEL	D011104577160
C568		nsp	DK96104300	C,CERAMIC CHIP HIK	X7R0.1μF-K/50V-1608REEL	D011104577160
C571xx		nsp	OA47505020	CAP.E.GENERIC	4.7μF/50V(M) 5x11,P=5(LUXON-GR) 85,2000H	N211247978110
C576						
ʃ		nsp	DD95101300	C,CERAMIC CHIP T.C	COG100pF-J/50V-1608REEL	D010101167160
C584						
C585		nsp	DK96104300	C,CERAMIC CHIP HIK	X7R0.1μF-K/50V-1608REEL	D011104577160
C586		nsp	DK96104300	C,CERAMIC CHIP HIK	X7R0.1μF-K/50V-1608REEL	D011104577160
C587		nsp	OA10602550	CAP.E.GENERIC	10μF/25V(M) 5x11,P=5(LUXON-GR) 85,2000H	N211210048110
C588		nsp	OA10602550	CAP.E.GENERIC	10μF/25V(M) 5x11,P=5(LUXON-GR) 85,2000H	N211210048110
C589		nsp	OA47601640	CAP.E.GENERIC	47μF/16V(M) 5x11,P=5(LUXON-GR) 85,2000H	N211247038110
C590		nsp	OA47601640	CAP.E.GENERIC	47μF/16V(M) 5x11,P=5(LUXON-GR) 85,2000H	N211247038110
C591		nsp	DD95470300	C,CERAMIC CHIP T.C	COG47pF-J/50V-1608REEL	D010470167160
C592		nsp	DD95470300	C,CERAMIC CHIP T.C	COG47pF-J/50V-1608REEL	D010470167160
C593		nsp	DK96104300	C,CERAMIC CHIP HIK	X7R0.1μF-K/50V-1608REEL	D011104577160
C594		nsp	DK96104300	C,CERAMIC CHIP HIK	X7R0.1μF-K/50V-1608REEL	D011104577160
C595		nsp	DD95470300	C,CERAMIC CHIP T.C	COG47pF-J/50V-1608REEL	D010470167160
C596		nsp	DD95470300	C,CERAMIC CHIP T.C	COG47pF-J/50V-1608REEL	D010470167160

NOTE : "nsp" PART IS LISTED FOR REFERENCE ONLY, MARANTZ WILL NOT SUPPLY THESE PARTS.

POS. NO	VERS. COLOR	PART NO. (FOR EUR)	PART NO. (MJI)	DESCRIPTION		
C597						
ʃ		nsp	OA10602550	CAP.E.GENERIC	10μF/25V(M) 5x11,P=5(LUXON-GR) 85,2000H	N211210048110
C600						
C601		nsp	DK96104300	C,CERAMIC CHIP HIK	X7R0.1μF-K/50V-1608REEL	D011104577160
C611		nsp	DD95101300	C,CERAMIC CHIP T.C	COG100pF-J/50V-1608REEL	D010101167160
C612		nsp	DD95101300	C,CERAMIC CHIP T.C	COG100pF-J/50V-1608REEL	D010101167160
C613		nsp	DD95101300	C,CERAMIC CHIP T.C	COG100pF-J/50V-1608REEL	D010101167160
C614		nsp	DD95150300	C,CERAMIC CHIP T.C	COG15pF-J/50V-1608REEL	D010150167160
C615		*OF100290R	*OF100290R	C,FILM POLYESTER	ST-0.015μF-J/100V-5RE	D02015306C060
C616		*OF100290R	*OF100290R	C,FILM POLYESTER	ST-0.015μF-J/100V-5RE	D02015306C060
C617		*OF100280R	*OF100280R	C,FILM POLYESTER	ST-0.0033μF-J/100V-5RE	D02033206C060
C618		nsp	OA47505020	CAP.E.GENERIC	4.7μF/50V(M) 5x11,P=5(LUXON-GR) 85,2000H	N211247978110
C619		nsp	DK96104300	C,CERAMIC CHIP HIK	X7R0.1μF-K/50V-1608REEL	D011104577160
C620		nsp	OA47602520	CAP.E.GENERIC	47μF/25V(M) 5x11,P=5(LUXON-GR) 85,2000H	N211247048110
C621		nsp	OA47602520	CAP.E.GENERIC	47μF/25V(M) 5x11,P=5(LUXON-GR) 85,2000H	N211247048110
C622		nsp	DK96104300	C,CERAMIC CHIP HIK	X7R0.1μF-K/50V-1608REEL	D011104577160
C623		nsp	OA47505020	CAP.E.GENERIC	4.7μF/50V(M) 5x11,P=5(LUXON-GR) 85,2000H	N211247978110
C624		*OF100280R	*OF100280R	C,FILM POLYESTER	ST-0.0033μF-J/100V-5RE	D02033206C060
C625		*OF100290R	*OF100290R	C,FILM POLYESTER	ST-0.015μF-J/100V-5RE	D02015306C060
C626		*OF100290R	*OF100290R	C,FILM POLYESTER	ST-0.015μF-J/100V-5RE	D02015306C060
C627		nsp	DD95150300	C,CERAMIC CHIP T.C	COG15pF-J/50V-1608REEL	D010150167160
CNT503		nsp	nsp	CN,WIRE	220MM 12P GILS-12,GILT-12 BK1533#26(2C*6) 2.0	L000221120010
CP114		nsp	nsp	CN.WAFER 2.0MM	TUC-P16X-B1 BD-TO-BD 16P(35237-16)	L101100031610
CP115		nsp	nsp	CN.WAFER 2.0MM	TUC-P20X-B1 BD-TO-BD 20P(35237-20)	L101100032010
D501						
ʃ		nsp	*HD201720R	D,SWITCHING	1N4148-52RE 75V 150MA DO-34 (MIC)	K000414803520
D513						
IC501		*HC108110R	*HC108110R	IC,ELECT VR	KIC9459F/SOP24P	J084945900010
IC502		*HC107280R	*HC107280R	IC,ELECT VR	KIC9482F /6CH WITHOUT TONE FLP28	J084948200010
IC503		HC10125090	HC10125090	IC,LOGIC	NJU7313AL-SDIP28P	J040731300010
IC504		*HC108100R	*HC108100R	IC,ANALOG	TC9481F ELECT TONE CONTROL SOP28P	J080948100010
IC505		HC405321Z0	HC405321Z0	IC,LOGIC	BU4053BCF/SOP16P	J040405300110
IC506						
ʃ		HC10102090	HC10102090	IC,LINEAR OP	NJM2068M-SOP8P	J121206800020
IC514						
J436		nsp	nsp	CN,WIRE 1P	JUMPER (0.6/52MM)	L045084006040
J501						
ʃ		nsp	nsp	CN,WIRE 1P	JUMPER (0.6/52MM)	L045084006040
J691						
JACK501		*YT001600R	*YT001600R	TER,RCA 4PIN	DAERYUNG/JK0400450N	G602040045000
JACK502		*YT002650R	*YT002650R	TER,RCA 6PIN	JACK SR7200(B B B)GND=0,0/JK060046EN	G603600460050
JACK503		*YT001600R	*YT001600R	TER,RCA 4PIN	DAERYUNG/JK0400450N	G602040045000
Q501						
ʃ		HT805501B0	HT805501B0	SEMI,TR/GE NPN 2SC	KTC2874B TO92-REEL	J502287400010
Q514						
Q515		*BA001360R	*BA001360R	SEMI,BRT/NPN RC	DTC114YS,0.3W/TO92M-REEL	J6020114Y0050
R501		nsp	nsp	R,CARBON FILM	560-J,1/5W-52RE-AX	C00005616P520
R502		nsp	nsp	R,CARBON FILM	560-J,1/5W-52RE-AX	C00005616P520
R502xx		nsp	NN05104610	R,CHIP THICK	100K-J,1/16W-1608REEL	C20001046M160
R503		nsp	nsp	R,CARBON FILM	4.7-J,1/4W-52RE-AX	C0004R7063520
R504		nsp	nsp	R,CARBON FILM	4.7-J,1/4W-52RE-AX	C0004R7063520
R507xx		nsp	NN05221610	R,CHIP THICK	220-J,1/16W-1608REEL	C20002216M160
R512xx		nsp	NN05221610	R,CHIP THICK	220-J,1/16W-1608REEL	C20002216M160
R515		nsp	nsp	R,CARBON FILM	10K-J,1/5W-52RE-AX	C00001036P520
R516xx		nsp	NN05474610	R,CHIP THICK	470K-J,1/16W-1608REEL	C20004746M160
R525		nsp	nsp	R,CARBON FILM	10K-J,1/5W-52RE-AX	C00001036P520
R526		nsp	nsp	R,CARBON FILM	10K-J,1/5W-52RE-AX	C00001036P520
R527		nsp	NN05103610	R,CHIP THICK	10K-J,1/16W-1608REEL	C20001036M160
R528		nsp	nsp	R,CARBON FILM	10K-J,1/5W-52RE-AX	C00001036P520
R529		nsp	NN05103610	R,CHIP THICK	10K-J,1/16W-1608REEL	C20001036M160
R530		nsp	NN05103610	R,CHIP THICK	10K-J,1/16W-1608REEL	C20001036M160
R532		nsp	nsp	R,CARBON FILM	22K-J,1/5W-52RE-AX	C00002236P520
R536xx		nsp	NN05221610	R,CHIP THICK	220-J,1/16W-1608REEL	C20002216M160
R537		nsp	nsp	R,CARBON FILM	22K-J,1/5W-52RE-AX	C00002236P520

NOTE : "nsp" PART IS LISTED FOR REFERENCE ONLY, MARANTZ WILL NOT SUPPLY THESE PARTS.

POS. NO	VERS. COLOR	PART NO. (FOR EUR)	PART NO. (MJI)	DESCRIPTION		
R538		nsp	NN05223610	R,CHIP THICK	22K-J,1/16W-1608REEL	C20002236M160
R539		nsp	nsp	R,CARBON FILM	22K-J,1/5W-52RE-AX	C00002236P520
R540		nsp	nsp	R,CARBON FILM	22K-J,1/5W-52RE-AX	C00002236P520
R541		nsp	NN05223610	R,CHIP THICK	22K-J,1/16W-1608REEL	C20002236M160
R542		nsp	NN05223610	R,CHIP THICK	22K-J,1/16W-1608REEL	C20002236M160
R544		nsp	nsp	R,CARBON FILM	1K-J,1/5W-52RE-AX	C00001026P520
R545		nsp	nsp	R,CARBON FILM	1K-J,1/5W-52RE-AX	C00001026P520
R549xx		nsp	NN05104610	R,CHIP THICK	100K-J,1/16W-1608REEL	C20001046M160
R549SW		nsp	nsp	R,CARBON FILM	100K-J,1/5W-52RE-AX	C00001046P520
R559xx		nsp	NN05471610	R,CHIP THICK	470-J,1/16W-1608REEL	C20004716M160
R567xx		nsp	NN05302610	R,CHIP THICK	3K-J,1/16W-1608REEL	C20003026M160
R567SW		nsp	NN05512610	R,CHIP THICK	5.1K-J,1/16W-1608REEL	C20005126M160
R569xx		nsp	NN05122610	R,CHIP THICK	1.2K-J,1/16W-1608REEL	C20001226M160
R582xx		nsp	NN05683610	R,CHIP THICK	68K-J,1/16W-1608REEL	C20006836M160
R589xx		nsp	NN05471610	R,CHIP THICK	470-J,1/16W-1608REEL	C20004716M160
R590		nsp	nsp	R,CARBON FILM	1K-J,1/5W-52RE-AX	C00001026P520
R591		nsp	nsp	R,CARBON FILM	1K-J,1/5W-52RE-AX	C00001026P520
R592		nsp	NN05102610	R,CHIP THICK	1K-J,1/16W-1608REEL	C20001026M160
R593		nsp	nsp	R,CARBON FILM	1K-J,1/5W-52RE-AX	C00001026P520
R594		nsp	nsp	R,CARBON FILM	1K-J,1/5W-52RE-AX	C00001026P520
R595		nsp	NN05102610	R,CHIP THICK	1K-J,1/16W-1608REEL	C20001026M160
R596		nsp	nsp	R,CARBON FILM	1K-J,1/5W-52RE-AX	C00001026P520
R597		nsp	nsp	R,CARBON FILM	1K-J,1/5W-52RE-AX	C00001026P520
R598		nsp	NN05102610	R,CHIP THICK	1K-J,1/16W-1608REEL	C20001026M160
R599		nsp	nsp	R,CARBON FILM	100-J,1/5W-52RE	C00001016P520
R600		nsp	nsp	R,CARBON FILM	100-J,1/5W-52RE	C00001016P520
R601		nsp	NN05104610	R,CHIP THICK	100K-J,1/16W-1608REEL	C20001046M160
R602		nsp	NN05104610	R,CHIP THICK	100K-J,1/16W-1608REEL	C20001046M160
R603		nsp	nsp	R,CARBON FILM	4.7K-J,1/5W-52RE-AX	C00004726P520
R604		nsp	nsp	R,CARBON FILM	4.7K-J,1/5W-52RE-AX	C00004726P520
R605		nsp	NN05472610	R,CHIP THICK	4.7K-J,1/16W-1608REEL	C20004726M160
R606		nsp	NN05472610	R,CHIP THICK	4.7K-J,1/16W-1608REEL	C20004726M160
R607		nsp	NN05103610	R,CHIP THICK	10K-J,1/16W-1608REEL	C20001036M160
R608		nsp	NN05103610	R,CHIP THICK	10K-J,1/16W-1608REEL	C20001036M160
R609		nsp	nsp	R,CARBON FILM	10K-J,1/5W-52RE-AX	C00001036P520
R610		nsp	nsp	R,CARBON FILM	10K-J,1/5W-52RE-AX	C00001036P520
R611		nsp	NN05103610	R,CHIP THICK	10K-J,1/16W-1608REEL	C20001036M160
R612		nsp	NN05103610	R,CHIP THICK	10K-J,1/16W-1608REEL	C20001036M160
R614		nsp	NN05472610	R,CHIP THICK	4.7K-J,1/16W-1608REEL	C20004726M160
R615						
∫		nsp	NN05103610	R,CHIP THICK	10K-J,1/16W-1608REEL	C20001036M160
R618						
R619		nsp	NN05104610	R,CHIP THICK	100K-J,1/16W-1608REEL	C20001046M160
R620		nsp	NN05104610	R,CHIP THICK	100K-J,1/16W-1608REEL	C20001046M160
R621		nsp	nsp	R,CARBON FILM	470-J,1/5W-52RE-AX	C00004716P520
R622		nsp	NN05471610	R,CHIP THICK	470-J,1/16W-1608REEL	C20004716M160
R623		nsp	NN05103610	R,CHIP THICK	10K-J,1/16W-1608REEL	C20001036M160
R623Fx		nsp	NN05104610	R,CHIP THICK	100K-J,1/16W-1608REEL	C20001046M160
R624		nsp	NN05103610	R,CHIP THICK	10K-J,1/16W-1608REEL	C20001036M160
R625		nsp	NN05104610	R,CHIP THICK	100K-J,1/16W-1608REEL	C20001046M160
R626		nsp	NN05104610	R,CHIP THICK	100K-J,1/16W-1608REEL	C20001046M160
R627		nsp	NN05103610	R,CHIP THICK	10K-J,1/16W-1608REEL	C20001036M160
R628		nsp	NN05103610	R,CHIP THICK	10K-J,1/16W-1608REEL	C20001036M160
R643		nsp	nsp	R,CARBON FILM	1K-J,1/5W-52RE-AX	C00001026P520
R644		nsp	nsp	R,CARBON FILM	100-J,1/4W-52RE-AX	C00001016352O
R645						
∫		nsp	NN05105610	R,CHIP THICK	1M-J,1/16W-1608REEL	C20001056M160
R649						
RLY501		*LY000300R	*LY000300R	RELAY	RSB12S DC12V 2A30VDC /SMALL SIGNAL	G680120202020
				SPK A PCB		
-		*YT002590R	*YT002590R	TER,BOARD SCREW 4P	R956 (L=BB R=RR)/SH0410370P	G612041037320
-		*YT001290R	*YT001290R	TER,BOARD SCREW 8P	SH0810360P	G614081036O0A
C903xx	/A/K/N	*OF100270R	*OF100270R	C,FILM POLYESTER	ST-0.0022μF-J/100V-5RE	D02022206C060

NOTE : "nsp" PART IS LISTED FOR REFERENCE ONLY, MARANTZ WILL NOT SUPPLY THESE PARTS.

POS. NO	VERS. COLOR	PART NO. (FOR EUR)	PART NO. (MJI)	DESCRIPTION		
C904xxG	/A/K/N	nsp	nsp	C,CERAMIC HIK AXIAL	X0.0047μF-K/16V-52RE	D005472773530
CP101		nsp	nsp	CN,WAFER 2.5MM	PLUG BD,BD 52668-1317 13P 2.5 ANG ZIP	L102526681310
J933						
∫		nsp	nsp	CN,WIRE 1P	JUMPER (0.6/52MM)	L045084006040
J954						
				S-VIDEO PCB		
-		*YT002540R	*YT002540R	JACK,D6.5	ALL R945 YKF51-5516/S-VHS 3P	G402042190000
-		*YT002560R	*YT002560R	JACK,DIN	AVP9080 DOM YKF51-5512	G403040010010
C801		nsp	OA10605020	CAP,E,GENERIC	10μF/50V(M) 5x11,P=5(LUXON-GR) 85,2000H	N211210078110
C802		nsp	*OA000080R	CAP,E,GENERIC	470μF/6.3V(M) 8X11,P=5(LUXON-GR) 85,2000H	N211247118110
C802N		nsp	DD95470300	C,CERAMIC CHIP T.C	COG47pF-J/50V-1608REEL	D010470167160
C803		nsp	OA10605020	CAP,E,GENERIC	10μF/50V(M) 5x11,P=5(LUXON-GR) 85,2000H	N211210078110
C803N		nsp	DD95470300	C,CERAMIC CHIP T.C	COG47pF-J/50V-1608REEL	D010470167160
C804		nsp	*OA000080R	CAP,E,GENERIC	470μF/6.3V(M) 8X11,P=5(LUXON-GR) 85,2000H	N211247118110
C804N		nsp	DD95470300	C,CERAMIC CHIP T.C	COG47pF-J/50V-1608REEL	D010470167160
C805		nsp	*OA000080R	CAP,E,GENERIC	470μF/6.3V(M) 8X11,P=5(LUXON-GR) 85,2000H	N211247118110
C805N		nsp	DD95470300	C,CERAMIC CHIP T.C	COG47pF-J/50V-1608REEL	D010470167160
C806		nsp	OA10605020	CAP,E,GENERIC	10μF/50V(M) 5x11,P=5(LUXON-GR) 85,2000H	N211210078110
C806N		nsp	DD95470300	C,CERAMIC CHIP T.C	COG47pF-J/50V-1608REEL	D010470167160
C807		nsp	OA47505020	CAP,E,GENERIC	4.7μF/50V(M) 5x11,P=5(LUXON-GR) 85,2000H	N211247978110
C807N		nsp	DD95470300	C,CERAMIC CHIP T.C	COG47pF-J/50V-1608REEL	D010470167160
C808		nsp	OA47505020	CAP,E,GENERIC	4.7μF/50V(M) 5x11,P=5(LUXON-GR) 85,2000H	N211247978110
C809		nsp	OA10605020	CAP,E,GENERIC	10μF/50V(M) 5x11,P=5(LUXON-GR) 85,2000H	N211210078110
C810		nsp	OA10605020	CAP,E,GENERIC	10μF/50V(M) 5x11,P=5(LUXON-GR) 85,2000H	N211210078110
C810A		nsp	DD95470300	C,CERAMIC CHIP T.C	COG47pF-J/50V-1608REEL	D010470167160
C811		nsp	OA47601640	CAP,E,GENERIC	47μF/16V(M) 5x11,P=5(LUXON-GR) 85,2000H	N211247038110
C811A		nsp	DD95470300	C,CERAMIC CHIP T.C	COG47pF-J/50V-1608REEL	D010470167160
C812		nsp	OA47505020	CAP,E,GENERIC	4.7μF/50V(M) 5x11,P=5(LUXON-GR) 85,2000H	N211247978110
C813		nsp	OA47505020	CAP,E,GENERIC	4.7μF/50V(M) 5x11,P=5(LUXON-GR) 85,2000H	N211247978110
C814		nsp	OA10605020	CAP,E,GENERIC	10μF/50V(M) 5x11,P=5(LUXON-GR) 85,2000H	N211210078110
C815		nsp	OA10605020	CAP,E,GENERIC	10μF/50V(M) 5x11,P=5(LUXON-GR) 85,2000H	N211210078110
C816		nsp	OA10701620	CAP,E,GENERIC	100μF/16V(M) 5x11,P=5(LUXON-GR) 85,2000H	N211210138110
C817		nsp	DK98103300	C,CERAMIC CHIP HIK	Y5V0.01μF-Z/50V-1608REEL	D011103597160
C817A		nsp	DK98103300	C,CERAMIC CHIP HIK	Y5V0.01μF-Z/50V-1608REEL	D011103597160
C818		nsp	nsp	C,CERAMIC HIK AXIAL	Y0.01μF-M/16V-52RE	D005103773530
C820		nsp	OA10701620	CAP,E,GENERIC	100μF/16V(M) 5x11,P=5(LUXON-GR) 85,2000H	N211210138110
C821		nsp	DK98103300	C,CERAMIC CHIP HIK	Y5V0.01μF-Z/50V-1608REEL	D011103597160
C821A		nsp	DK98103300	C,CERAMIC CHIP HIK	Y5V0.01μF-Z/50V-1608REEL	D011103597160
C822		nsp	OA10701020	CAP,E,GENERIC	100μF/10V(M) 5X11,P=5(LUXON-GR) 85,2000H	N211210128110
C823		nsp	OA47601640	CAP,E,GENERIC	47μF/16V(M) 5x11,P=5(LUXON-GR) 85,2000H	N211247038110
C824		nsp	OA10605020	CAP,E,GENERIC	10μF/50V(M) 5x11,P=5(LUXON-GR) 85,2000H	N211210078110
C825		nsp	OA22505020	CAP,E,GENERIC	2.2μF/50V(M) 5x11,P=5(LUXON-GR) 85,2000H	N211222978110
C828		nsp	OA10605020	CAP,E,GENERIC	10μF/50V(M) 5x11,P=5(LUXON-GR) 85,2000H	N211210078110
C828A		nsp	OA47601640	CAP,E,GENERIC	47μF/16V(M) 5x11,P=5(LUXON-GR) 85,2000H	N211247038110
C829		nsp	OA47601640	CAP,E,GENERIC	47μF/16V(M) 5x11,P=5(LUXON-GR) 85,2000H	N211247038110
C831		nsp	DD95101300	C,CERAMIC CHIP T.C	COG100pF-J/50V-1608REEL	D010101167160
C832		nsp	OA47601640	CAP,E,GENERIC	47μF/16V(M) 5x11,P=5(LUXON-GR) 85,2000H	N211247038110
C833		nsp	DK98103300	C,CERAMIC CHIP HIK	Y5V0.01μF-Z/50V-1608REEL	D011103597160
C834		nsp	OA10701020	CAP,E,GENERIC	100μF/10V(M) 5X11,P=5(LUXON-GR) 85,2000H	N211210128110
C835		nsp	nsp	C,CERAMIC T.C AXIAL	SL47pF-J/50V-52RE	D001470067520
C836		nsp	OA10505020	CAP,E,GENERIC	1μF/50V(M) 5x11,P=5(LUXON-GR) 85,2000H	N211210978110
C837		nsp	nsp	C,CERAMIC T.C DISC	CH20pF-J/50V-5RE	D000200167060
C838		nsp	DD95101300	C,CERAMIC CHIP T.C	COG100pF-J/50V-1608REEL	D010101167160
C839		nsp	OA10701020	CAP,E,GENERIC	100μF/10V(M) 5X11,P=5(LUXON-GR) 85,2000H	N211210128110
C840A		nsp	OA47601640	CAP,E,GENERIC	47μF/16V(M) 5x11,P=5(LUXON-GR) 85,2000H	N211247038110
C840U	/U	nsp	nsp	C,CERAMIC T.C DISC	CH20pF-J/50V-5RE	D000200167060
C841A		nsp	DK98103300	C,CERAMIC CHIP HIK	Y5V0.01μF-Z/50V-1608REEL	D011103597160
C841U	/U	nsp	nsp	C,CERAMIC T.C DISC	CH20pF-J/50V-5RE	D000200167060
C842		nsp	DK98103300	C,CERAMIC CHIP HIK	Y5V0.01μF-Z/50V-1608REEL	D011103597160
C842A		nsp	DK98103300	C,CERAMIC CHIP HIK	Y5V0.01μF-Z/50V-1608REEL	D011103597160
C843		nsp	nsp	C,CERAMIC T.C DISC	CH20pF-J/50V-5RE	D000200167060
C844		nsp	OA10701020	CAP,E,GENERIC	100μF/10V(M) 5X11,P=5(LUXON-GR) 85,2000H	N211210128110
C845		nsp	nsp	C,CERAMIC HIK AXIAL	B0.001μF-K/50V-52RE	D005102177530

NOTE : "nsp" PART IS LISTED FOR REFERENCE ONLY, MARANTZ WILL NOT SUPPLY THESE PARTS

POS. NO	VERS. COLOR	PART NO. (FOR EUR)	PART NO. (MJI)	DESCRIPTION		
C846		nsp	*OA000060R	CAP,E,GENERIC	0.33μF/50V(M) 5x11,P=5(LUXON-GR) 85,2000H	N211233878110
C847		nsp	DD95101300	C,CERAMIC CHIP T.C	COG100pF-J/50V-1608REEL	D010101167160
C848		nsp	DK96222300	C,CERAMIC CHIP HIK	X7R2200pF-K/50V-1608REEL	D011222777160
C849		nsp	OA10505020	CAP,E,GENERIC	1μF/50V(M) 5x11,P=5(LUXON-GR) 85,2000H	N211210978110
C850						
∫	/A/K/N	nsp	nsp	C,CERAMIC T.C DISC	CH22pF-J/50V-5RE	D000220167060
C853						
C854	/A/K/N	nsp	nsp	C,CERAMIC HIK AXIAL	Y0.01μF-M/16V-52RE	D005103773530
C855	/A/K/N	nsp	nsp	C,CERAMIC HIK AXIAL	Y0.01μF-M/16V-52RE	D005103773530
C858		nsp	DD95101300	C,CERAMIC CHIP T.C	COG100pF-J/50V-1608REEL	D010101167160
C858A		nsp	DD95470300	C,CERAMIC CHIP T.C	COG47pF-J/50V-1608REEL	D010470167160
C859		nsp	nsp	C,CERAMIC HIK AXIAL	Y0.01μF-M/16V-52RE	D005103773530
CP108		nsp	nsp	CN,WAFER 2.0MM	TUC-P20X-B1 BD-TO-BD 20P(35237-20)	L101100032010
CP301SV		nsp	nsp	CN,WAFER 2.0MM	G1L-S-4P-S2T2-EF	L101220040000
D801						
∫		nsp	*HD201720R	D,SWITCHING	1N4148-52RE 75V 150MA DO-34 (MIC)	K000414803520
D804						
IC802		HC10210090	HC10210090	IC,MONITOR SW	NJM2296M VIDEO SW SOP16	J171229600010
IC803		HC10210090	HC10210090	IC,MONITOR SW	NJM2296M VIDEO SW SOP16	J171229600010
IC804		*HC800010R	*HC800010R	IC,LOGIC	MM74HC4053MX SOP16/ANOLOG MUX,DEMUX	J040744053040
IC805		*HC107310R	*HC107310R	IC,ANALOG	M35010-001SP ON SCREEN DISP DIP20	J080350100010
IC806		*HC107230R	*HC107230R	IC,ANALOG	BA7046 VIDEO SYNC DIP8	J080704600000
IC807	/A/K/N	HC700400Z0	HC700400Z0	IC,LOGIC	MM74HCU04MX SOP14 /HEX INVERTER	J040740400100
IC808	/A/K/N	*HC700310R	*HC700310R	IC,LOGIC	GD74HC00D (GOLDSTAR)	J040740000040
J800						
∫		nsp	nsp	CN,WIRE 1P	JUMPER (0.6/52MM)	L045084006040
J808						
J810		nsp	NN05000610	R,CHIP THICK	0-J,1/16W-1608REEL	C20000006M160
J811						
∫		nsp	nsp	CN,WIRE 1P	JUMPER (0.6/52MM)	L045084006040
J859						
J861						
∫		nsp	NN05000610	R,CHIP THICK	0-J,1/16W-1608REEL	C20000006M160
J866						
J867						
∫		nsp	nsp	CN,WIRE 1P	JUMPER (0.6/52MM)	L045084006040
J931A						
L801		nsp	nsp	COIL,FILTER-INDUCTOR	22UH-Q40/17M-R3.4-52RE 02TB	D330220001020
L802		nsp	nsp	COIL,FILTER-INDUCTOR	22UH-Q40/17M-R3.4-52RE 02TB	D330220001020
L804		*FC500010R	*FC500010R	BEAD,COIL	BAS3580T0 3.5PHI*8 52RE	7610035800020
Q801		*BA001190R	*BA001190R	SEMI,BRT/NPN RC	KRC107M,0.4W/TO92M-REEL	J6020107M0010
Q801A		*BA001190R	*BA001190R	SEMI,BRT/NPN RC	KRC107M,0.4W/TO92M-REEL	J6020107M0010
Q803		*BA001210R	*BA001210R	SEMI,BRT/PNP RA	KRA102M,0.3W/TO92M-REEL	J6002202M0010
Q805		*BA001430R	*BA001430R	SEMI,BRT/PNP RB	TR KRA107M PNP	J601107M00050
Q806		HT805501B0	HT805501B0	SEMI,TR/GE NPN 2SC	KTC2874B TO92-REEL	J502287400010
Q806A		HT805501B0	HT805501B0	SEMI,TR/GE NPN 2SC	KTC2874B TO92-REEL	J502287400010
Q808		*BA001190R	*BA001190R	SEMI,BRT/NPN RC	KRC107M,0.4W/TO92M-REEL	J6020107M0010
Q816		*HT100610R	*HT100610R	SEMI,TR/GE PNP 2SA	2SA933S,0.3W/TO92M-REEL	J5000933S0050
Q851		*HT300890R	*HT300890R	SEMI,TR/GE NPN 2SC	2SC3199-GR/KTC3199-GR BULK	J5023199G0000
Q852		*HT100610R	*HT100610R	SEMI,TR/GE PNP 2SA	2SA933S,0.3W/TO92M-REEL	J5000933S0050
Q852A		*HT100610R	*HT100610R	SEMI,TR/GE PNP 2SA	2SA933S,0.3W/TO92M-REEL	J5000933S0050
Q854		*HT100610R	*HT100610R	SEMI,TR/GE PNP 2SA	2SA933S,0.3W/TO92M-REEL	J5000933S0050
R801		nsp	NN05680610	R,CHIP THICK	68-J,1/16W-1608REEL	C20006806M160
R802		nsp	NN05680610	R,CHIP THICK	68-J,1/16W-1608REEL	C20006806M160
R803						
∫		nsp	NN05750610	R,CHIP THICK	75-J,1/16W-1608REEL	C20007506M160
R814						
R815		nsp	nsp	R,CARBON FILM	2.2-J,1/5W-52RE-AX	C0002R206P520
R816		nsp	nsp	R,CARBON FILM	1K-J,1/5W-52RE-AX	C00001026P520
R816A		nsp	nsp	R,CARBON FILM	1K-J,1/5W-52RE-AX	C00001026P520
R817		nsp	nsp	R,CARBON FILM	1-J,1/5W-52RE-AX	C0001R006P520
R818		nsp	nsp	R,CARBON FILM	2.2K-J,1/5W-52RE-AX	C00002226P520
R818A		nsp	nsp	R,CARBON FILM	2.2K-J,1/5W-52RE-AX	C00002226P520
R823		nsp	NN05224610	R,CHIP THICK	220K-J,1/16W-1608REEL	C20002246M160

NOTE : "nsp" PART IS LISTED FOR REFERENCE ONLY, MARANTZ WILL NOT SUPPLY THESE PARTS.

POS. NO	VERS. COLOR	PART NO. (FOR EUR)	PART NO. (MJI)	DESCRIPTION		
R823A		nsp	nsp	R,CARBON FILM	75-J,1/5W-52RE-AX	C00007506P520
R824		nsp	nsp	R,CARBON FILM	10-J,1/5W-52RE-AX	C00001006P520
R825		nsp	NN05221610	R,CHIP THICK	220-J,1/16W-1608REEL	C20002216M160
R826		nsp	NN05103610	R,CHIP THICK	10K-J,1/16W-1608REEL	C20001036M160
R827		nsp	NN05104610	R,CHIP THICK	100K-J,1/16W-1608REEL	C20001046M160
R828		nsp	NN05104610	R,CHIP THICK	100K-J,1/16W-1608REEL	C20001046M160
R829		nsp	nsp	R,CARBON FILM	100K-J,1/5W-52RE-AX	C00001046P520
R830		nsp	NN05104610	R,CHIP THICK	100K-J,1/16W-1608REEL	C20001046M160
R831		nsp	NN05102610	R,CHIP THICK	1K-J,1/16W-1608REEL	C20001026M160
R832		nsp	NN05471610	R,CHIP THICK	470-J,1/16W-1608REEL	C20004716M160
R833		nsp	NN05103610	R,CHIP THICK	10K-J,1/16W-1608REEL	C20001036M160
R834		nsp	NN05822610	R,CHIP THICK	8.2K-J,1/16W-1608REEL	C20008226M160
R835		nsp	NN05153610	R,CHIP THICK	15K-J,1/16W-1608REEL	C20001536M160
R836		nsp	NN05102610	R,CHIP THICK	1K-J,1/16W-1608REEL	C20001026M160
R837		nsp	NN05473610	R,CHIP THICK	47K-J,1/16W-1608REEL	C20004736M160
R838		nsp	NN05333610	R,CHIP THICK	33K-J,1/16W-1608REEL	C20003336M160
R839		nsp	nsp	R,CARBON FILM	1K-J,1/5W-52RE-AX	C00001026P520
R840		nsp	nsp	R,CARBON FILM	1K-J,1/5W-52RE-AX	C00001026P520
R841		nsp	nsp	R,CARBON FILM	1K-J,1/5W-52RE-AX	C00001026P520
R842		nsp	NN05101610	R,CHIP THICK	100-J,1/16W-1608REEL	C20001016M160
R843U	/U	nsp	nsp	R,CARBON FILM	470-J,1/5W-52RE-AX	C00004716P520
R844U	/U	nsp	nsp	R,CARBON FILM	1M-J,1/5W-52RE-AX	C00001056P520
R845		nsp	nsp	R,CARBON FILM	2.2K-J,1/5W-52RE-AX	C00002226P520
R846		nsp	NN05222610	R,CHIP THICK	2.2K-J,1/16W-1608REEL	C20002226M160
R847		nsp	NN05103610	R,CHIP THICK	10K-J,1/16W-1608REEL	C20001036M160
R848		nsp	nsp	R,CARBON FILM	330-J,1/5W-52RE-AX	C00003316P520
R849		nsp	NN05105610	R,CHIP THICK	1M-J,1/16W-1608REEL	C20001056M160
R850		nsp	NN05154610	R,CHIP THICK	150K-J,1/16W-1608REEL	C20001546M160
R851		nsp	nsp	R,CARBON FILM	470K-J,1/5W-52RE-AX	C00004746P520
R852		nsp	NN05333610	R,CHIP THICK	33K-J,1/16W-1608REEL	C20003336M160
R852A		nsp	NN05123610	R,CHIP THICK	12K-J,1/16W-1608REEL	C20001236M160
R853		nsp	NN05474610	R,CHIP THICK	470K-J,1/16W-1608REEL	C20004746M160
R854	/A/K/N	nsp	nsp	R,CARBON FILM	1M-J,1/5W-52RE-AX	C00001056P520
R855	/A/K/N	nsp	nsp	R,CARBON FILM	470-J,1/5W-52RE-AX	C00004716P520
R856	/A/K/N	nsp	nsp	R,CARBON FILM	1M-J,1/5W-52RE-AX	C00001056P520
R857	/A/K/N	nsp	nsp	R,CARBON FILM	470-J,1/5W-52RE-AX	C00004716P520
R858	/A/K/N	nsp	nsp	R,CARBON FILM	1K-J,1/5W-52RE-AX	C00001026P520
R859	/A/K/N	nsp	nsp	R,CARBON FILM	4.7-J,1/5W-52RE-AX	C0004R706P520
R860	/A/K/N	nsp	nsp	R,CARBON FILM	220-J,1/5W-52RE-AX	C00002216P520
R861		nsp	nsp	R,CARBON FILM	100-J,1/5W-52RE	C00001016P520
R861A		nsp	nsp	R,CARBON FILM	47K-J,1/5W-52RE-AX	C00004736P520
R862		nsp	nsp	R,CARBON FILM	47K-J,1/5W-52RE-AX	C00004736P520
R862A		nsp	nsp	R,CARBON FILM	100-J,1/5W-52RE	C00001016P520
R863		nsp	nsp	R,CARBON FILM	100-J,1/5W-52RE	C00001016P520
R863A		nsp	nsp	R,CARBON FILM	12K-J,1/5W-52RE-AX	C00001236P520
XTAL801U	/U	*JX000980R	*JX000980R	CRYSTAL	14.31818MHZ,HC49U-CL;18pF STRAGHT LEAD	E80014R318040
XTAL802	/A/K/N	*JX000990R	*JX000990R	CRYSTAL	17.734476MHz HC/49U CL;18pF STRAIGHT LEAD	E80017R734420
XTAL803	/A/K/N	*JX000980R	*JX000980R	CRYSTAL	14.31818MHZ,HC49U-CL;18pF STRAGHT LEAD	E80014R318040
				VIDEO PCB		
-		*YT002630R	*YT002630R	TER,RCA 3PIN	JACK RD7106 (Y Y Y)GND=0,0/JC030012FN	G606300125040
-		*YT002610R	*YT002610R	TER,RCA 2PIN	RD-7106(Y Y)GND=0/JC0200095N	G601200092020
C871		nsp	nsp	C,CERAMIC T.C AXIAL	SL47pF-J/50V-52RE	D001470067520
C873		nsp	*OA000080R	CAP,E,GENERIC	470μF/6.3V(M) 8X11,P=5(LUXON-GR) 85,2000H	N211247118110
C874		nsp	nsp	C,CERAMIC T.C AXIAL	SL47pF-J/50V-52RE	D001470067520
C875		nsp	*OA000080R	CAP,E,GENERIC	470μF/6.3V(M) 8X11,P=5(LUXON-GR) 85,2000H	N211247118110
C876		nsp	nsp	C,CERAMIC T.C AXIAL	SL47pF-J/50V-52RE	D001470067520
C877		nsp	*OA000080R	CAP,E,GENERIC	470μF/6.3V(M) 8X11,P=5(LUXON-GR) 85,2000H	N211247118110
C878						
∫		nsp	OA10605020	CAP,E,GENERIC	10μF/50V(M) 5x11,P=5(LUXON-GR) 85,2000H	N211210078110
C881						
C882		nsp	OA47601640	CAP,E,GENERIC	47μF/16V(M) 5x11,P=5(LUXON-GR) 85,2000H	N211247038110
C883		nsp	nsp	C,CERAMIC HIK AXIAL	Y0.01μF-M/16V-52RE	D005103773530
C884		nsp	nsp	C,CERAMIC HIK AXIAL	Y0.01μF-M/16V-52RE	D005103773530

NOTE : "nsp" PART IS LISTED FOR REFERENCE ONLY, MARANTZ WILL NOT SUPPLY THESE PARTS.

POS. NO	VERS. COLOR	PART NO. (FOR EUR)	PART NO. (MJI)	DESCRIPTION		
C885		nsp	OA47601640	CAP.E.GENERIC	47μF/16V(M) 5x11,P=5(LUXON-GR) 85,2000H	N211247038110
C886		nsp	OA10605020	CAP.E.GENERIC	10μF/50V(M) 5x11,P=5(LUXON-GR) 85,2000H	N211210078110
C887		nsp	nsp	C,CERAMIC HIK AXIAL	B100pF-K/50V-52RE	D005101177520
C888		nsp	nsp	C,CERAMIC HIK AXIAL	Y0.01μF-M/16V-52RE	D005103773530
C889		nsp	OA10701020	CAP.E.GENERIC	100μF/10V(M) 5X11,P=5(LUXON-GR) 85,2000H	N211210128110
C890		nsp	OA10605020	CAP.E.GENERIC	10μF/50V(M) 5x11,P=5(LUXON-GR) 85,2000H	N211210078110
C891		nsp	OA22505020	CAP.E.GENERIC	2.2μF/50V(M) 5x11,P=5(LUXON-GR) 85,2000H	N211222978110
C892		nsp	nsp	C,CERAMIC HIK AXIAL	B100pF-K/50V-52RE	D005101177520
C894		nsp	OA10605020	CAP.E.GENERIC	10μF/50V(M) 5x11,P=5(LUXON-GR) 85,2000H	N211210078110
C895		nsp	OA47601640	CAP.E.GENERIC	47μF/16V(M) 5x11,P=5(LUXON-GR) 85,2000H	N211247038110
C895A		nsp	nsp	C,CERAMIC T.C AXIAL	SL47pF-J/50V-52RE	D001470067520
C896		nsp	nsp	C,CERAMIC HIK AXIAL	B100pF-K/50V-52RE	D005101177520
CP109		nsp	nsp	CN,WAFER 2.0MM	TUC-P20X-B1 BD-TO-BD 20P(35237-20)	L101100032010
CP301CV		nsp	nsp	CN,WAFER 2.0MM	GIL-S-2P-S2T2-EF	L101220020000
D870						
⚠		nsp	*HD201720R	D,SWITCHING	1N4148-52RE 75V 150MA DO-34 (MIC)	K000414803520
D884						
IC872		HC10210090	HC10210090	IC,MONITOR SW	NJM2296M VIDEO SW SOP16	J171229600010
IC873		*HC800010R	*HC800010R	IC,LOGIC	MM74HC4053MX SOP16/ANOLOG MUX,DEMUX	J040744053040
IC874		*HC400010R	*HC400010R	IC,LOGIC	BU4094BCF-E2 SHIFT RESISTOR SOP16	J040140940030
J901						
⚠		nsp	nsp	CN,WIRE 1P	JUMPER (0.6/52MM)	L045084006040
J923						
Q821		*HT100610R	*HT100610R	SEMI,TR/GE PNP 2SA	2SA933S,0.3W/TO92M-REEL	J5000933S0050
Q822		HT805501B0	HT805501B0	SEMI,TR/GE NPN 2SC	KTC2874B TO92-REEL	J502287400010
Q822A		*HT100610R	*HT100610R	SEMI,TR/GE PNP 2SA	2SA933S,0.3W/TO92M-REEL	J5000933S0050
Q870		*BA001190R	*BA001190R	SEMI,BRT/NPN RC	KRC107M,0.4W/TO92M-REEL	J6020107M0010
Q871		*BA001210R	*BA001210R	SEMI,BRT/PNP RA	KRA102M,0.3W/TO92M-REEL	J6002202M0010
R822A		nsp	nsp	R,CARBON FILM	12K-J,1/5W-52RE-AX	C00001236P520
R864		nsp	nsp	R,CARBON FILM	1K-J,1/5W-52RE-AX	C00001026P520
R865		nsp	nsp	R,CARBON FILM	1K-J,1/5W-52RE-AX	C00001026P520
R871		nsp	nsp	R,CARBON FILM	10K-J,1/5W-52RE-AX	C00001036P520
R873		nsp	nsp	R,CARBON FILM	68-J,1/5W-52RE-AX	C00006806P520
R874		nsp	nsp	R,CARBON FILM	1K-J,1/5W-52RE-AX	C00001026P520
R874A		nsp	nsp	R,CARBON FILM	100-J,1/5W-52RE	C00001016P520
R875		nsp	nsp	R,CARBON FILM	10K-J,1/5W-52RE-AX	C00001036P520
R876		nsp	nsp	R,CARBON FILM	75-J,1/5W-52RE-AX	C00007506P520
R877		nsp	nsp	R,CARBON FILM	10K-J,1/5W-52RE-AX	C00001036P520
R878						
⚠		nsp	nsp	R,CARBON FILM	75-J,1/5W-52RE-AX	C00007506P520
R882						
R883		nsp	nsp	R,CARBON FILM	2.2K-J,1/5W-52RE-AX	C00002226P520
R883A		nsp	nsp	R,CARBON FILM	47K-J,1/5W-52RE-AX	C00004736P520
R884		nsp	nsp	R,CARBON FILM	1-J,1/5W-52RE-AX	C0001R006P520
R885		nsp	nsp	R,CARBON FILM	2.2-J,1/5W-52RE-AX	C0002R206P520
R886		nsp	nsp	R,CARBON FILM	47K-J,1/5W-52RE-AX	C00004736P520
R889		nsp	nsp	R,CARBON FILM	220K-J,1/5W-52RE-AX	C00002246P520
R890		nsp	nsp	R,CARBON FILM	10-J,1/5W-52RE-AX	C00001006P520
R891		nsp	nsp	R,CARBON FILM	220-J,1/5W-52RE-AX	C00002216P520
R895		nsp	nsp	R,CARBON FILM	100K-J,1/5W-52RE-AX	C00001046P520
R897		nsp	nsp	R,CARBON FILM	10K-J,1/5W-52RE-AX	C00001036P520
R899		nsp	nsp	R,CARBON FILM	1K-J,1/5W-52RE-AX	C00001026P520
				POWER PCB		
-	/U	nsp	nsp	P.C.B INS ASSY	SR6300/U(MARANTZ)/POWER-AXIAL	7027061885A10
-	/U	nsp	nsp	P.C.B INS ASSY	SR6300/U(MARANTZ)/POWER-MANUAL	7027061885M10
-	/U	nsp	nsp	P.C.B INS ASSY	SR6300/U(MARANTZ)/POWER-RADIAL	7027061885R10
⚠ OUT710	/U	nsp	*YT002810R	SOCKET,POW. RECEPT	AC OUTLET CCT1304-0212	G435040070000
C710		*OF100300R	*OF100300R	C,FILM POLYESTER	ST-0.047μF-J/100V-5RE	D02047306C060
C711		*OF100300R	*OF100300R	C,FILM POLYESTER	ST-0.047μF-J/100V-5RE	D02047306C060
C712		*OF100300R	*OF100300R	C,FILM POLYESTER	ST-0.047μF-J/100V-5RE	D02047306C060
C713		nsp	nsp	C,CERAMIC SEMI DISC	F0.1μF-Z/50V-5RE PI6	D006104597050
⚠ C714		DK17472900	DK17472900	C,CERAMIC AC(SAFETY)	DE2F3KH108MN4A(DE1310-469E472M) P10,25	D00847208K060
C717		nsp	OA47702520	CAP.E.GENERIC	470μF/25V(M) 10x15,P=5(LUXON-GR) 85,2000H	N211247148110

NOTE : "nsp" PART IS LISTED FOR REFERENCE ONLY, MARANTZ WILL NOT SUPPLY THESE PARTS.

POS. NO	VERS. COLOR	PART NO. (FOR EUR)	PART NO. (MJI)	DESCRIPTION		
C718		nsp	OA10505020	CAP.E.GENERIC	1μF/50V(M) 5x11,P=5(LUXON-GR) 85,2000H	N211210978110
C719		nsp	OA22705020	CAP.E.GENERIC	220μF/50V(M) 10x17,P=5(LUXON-GR) 85,2000H	N211222178110
CN119		nsp	nsp	CN,WAFER 2.5MM	5267-04A 4P	L102526700400
CNT953	/K	nsp	nsp	CN,WIRE	120/3P 210-05=YH396-05V WH1617#22 7.92	L000121030070
CP711		nsp	nsp	CN,WAFER 3.96MM	35328-0210	L104353280200
CP712		nsp	nsp	CN,WAFER 7.92MM	YW396V(03AV)	L108039602010
CP713	/A/K/N	nsp	nsp	CN,WAFER 3.96MM	35328-0210	L104353280200
CP715		nsp	nsp	CN,WAFER 2.0MM	G1L-S-4P-S2T2-EF	L101220040000
CP716		nsp	nsp	CN,WAFER 2.0MM	G1L-S-5P-S2T2-EF	L101220050000
D710						
⚠		nsp	*HD201570R	D,SWITCHING	IN4007 52REEL 1000V 1A	K000400700520
D713						
D714		nsp	*HD201720R	D,SWITCHING	1N4148-52RE 75V 150MA DO-34 (MIC)	K000414803520
D715		nsp	*HD201720R	D,SWITCHING	1N4148-52RE 75V 150MA DO-34 (MIC)	K000414803520
D719		nsp	*HD201570R	D,SWITCHING	IN4007 52REEL 1000V 1A	K000400700520
⚠ F711	/A/N/U	*FS000950R	*FS000950R	FUSE GLASS 20MM	T2.5A /250V-SVBRTC(K) 218	N751222501110
F711A	/A/N/U	nsp	nsp	HOLDER,FUSE CLIP	PI5.2-REEL	G645000050010
F711B	/A/N/U	nsp	nsp	HOLDER,FUSE CLIP	PI5.2-REEL	G645000050010
⚠ F712	/K/U	nsp	*FS000940R	FUSE CERAMIC 20MM	T8A /250V-SVBRTC(K) 215	N752228001110
⚠ F712	/U	nsp	*FS000940R	FUSE CERAMIC 20MM	T8A /250V-SVBRTC(K) 215	N752228001110
F712A		nsp	nsp	HOLDER,FUSE CLIP	PI5.2-REEL	G645000050010
F712B		nsp	nsp	HOLDER,FUSE CLIP	PI5.2-REEL	G645000050010
⚠ F715	/U	nsp	*FS000950R	FUSE GLASS 20MM	T2.5A /250V-SVBRTC(K) 218	N751222501110
GND711		nsp	nsp	TERMINAL	ALL PBST/GND PLATE-REEL	3790040876010
F715A	/U	nsp	nsp	HOLDER,FUSE CLIP	PI5.2-REEL	G645000050010
IC710		HC38906090	HC38906090	IC,LINEAR-REGULATOR	MC7806CT TO220 (ON SEMI)(METAL TYPE)	J126780600160
J701		nsp	nsp	CN,WIRE 1P	JUMPER (0.6/52MM)	L045084006040
F715B	/U	nsp	nsp	HOLDER,FUSE CLIP	PI5.2-REEL	G645000050010
J716	/A/N/U	nsp	nsp	CN,WIRE 1P	JUMPER (0.6/52MM)	L045084006040
J716U	/U	nsp	nsp	CN,WIRE 1P	JUMPER (0.6/52MM)	L045084006040
L710		nsp	nsp	COIL,FILTER-INDUCTOR	10UH-Q40/24M-R2.5-52RE 02TB	D330100700520
L711		nsp	nsp	COIL,FILTER-INDUCTOR	10UH-Q40/24M-R2.5-52RE 02TB	D330100700520
L712		nsp	nsp	COIL,FILTER-INDUCTOR	10UH-Q40/24M-R2.5-52RE 02TB	D330100700520
⚠ OUT710	/N	*YT002820R	*YT002820R	SOCKET,POW. RECEPT	AC OUTLET YKE31-0090	G435040110000
Q711		*BA001190R	*BA001190R	SEMI,BRT/NPN RC	KRC107M,0.4W/TO92M-REEL	J6020107M0010
Q712		*HT100600R	*HT100600R	SEMI,TR/GE PNP 2SA	KSA916Y,0.9W/TO92L-REEL	J5000916Y0050
Q714	/K/U	nsp	*BA001190R	SEMI,BRT/NPN RC	KRC107M,0.4W/TO92M-REEL	J6020107M0010
R710U	/U	nsp	nsp	R,METAL FILM 100PPM	ERC-12UGK225-BULK	C060022574000
R712		nsp	nsp	R,CARBON FILM	470-J,1/5W-52RE-AX	C00004716P520
R713		nsp	nsp	R,CARBON FILM	10K-J,1/5W-52RE-AX	C00001036P520
R714		nsp	nsp	R,CARBON FILM	15K-J,1/5W-52RE-AX	C00001536P520
R716		nsp	nsp	R,FIXED,METAL	RN-T-1/4WJ-47 2.8*6.4(MAX)	N112113647010
R718		nsp	nsp	R,CARBON FILM	1.8K-J,1/5W-52RE-AX	C00001826P520
⚠ RY710		*LY000200R	*LY000200R	RELAY	HR-CR7-DC12V/10A	G680000210000
⚠ T710	/K	nsp	*TS001680R	POWER TRANS	AVR1603(GE1)115,230V/50,60HZ STAND BY 35*15	8200350150140
⚠ T710	/A/N	*TS001690R	*TS001690R	POWER TRANS	AVR1603(KE2)230V/50HZ STAND BY 35*15	8200350150120
⚠ T710	/U	nsp	*TS001700R	POWER TRANS	AVR1603(KE3)120V/60HZ STAND BY 35*15	8200350150110
ZD711		*HD301980R	*HD301980R	D,ZENER	MTZJ7.5B-0.5W/5MA-52MM	K06007R544520
ZD712		*HD302000R	*HD302000R	D,ZENER	MTZJ15B-0.5W/5MA-52MM	K06015R044520
ZD713		*HD302000R	*HD302000R	D,ZENER	MTZJ15B-0.5W/5MA-52MM	K06015R044520
ZD715		HD30431000	HD30431000	D,ZENER	MTZJ4.3B-0.5W/5MA-52MM	K06004R344520
ZD716	/K/U	nsp	*HD301950R	D,ZENER	MTZJ20B-0.5W/5MA-52MM	K06020R044520

NOTE : "nsp" PART IS LISTED FOR REFERENCE ONLY, MARANTZ WILL NOT SUPPLY THESE PARTS.

POS. NO	VERS. COLOR	PART NO. (FOR EUR)	PART NO. (MJI)	DESCRIPTION		
				MAIN PCB		
BEAD101						
ʃ		*FC500010R	*FC500010R	BEAD,COIL	BAS3580T0 3.5PHI*8 52RE	7610035800020
BEAD105						
C101		*OF100250R	*OF100250R	C,FILM POLYESTER	RED-0.1μF-K/250V-5RE	D02010407H080
C102		*OF100300R	*OF100300R	C,FILM POLYESTER	ST-0.047μF-J/100V-5RE	D02047306C060
C103		*OF100300R	*OF100300R	C,FILM POLYESTER	ST-0.047μF-J/100V-5RE	D02047306C060
C104x		*OF100260R	*OF100260R	C,FILM POLYESTER	BED-0.1μF-K/63V-5RE	D020104078060
C105x		*OF100260R	*OF100260R	C,FILM POLYESTER	RED-0.1μF-K/63V-5RE	D020104078060
C106		*OF100250R	*OF100250R	C,FILM POLYESTER	RED-0.1μF-K/250V-5RE	D02010407H080
C107		*OF100250R	*OF100250R	C,FILM POLYESTER	RED-0.1μF-K/250V-5RE	D02010407H080
C108						
ʃ		*OF100300R	*OF100300R	C,FILM POLYESTER	ST-0.047μF-J/100V-5RE	D02047306C060
C111						
C114		*EX000130R	*EX000130R	C,ELECT GE 85C	2200μF-M/35V,18*35.5 BULK(SNAPIN) SAGUB	D040222085240
C115		*EX000130R	*EX000130R	C,ELECT GE 85C	2200μF-M/35V,18*35.5 BULK(SNAPIN) SAGUB	D040222085240
C116		nsp	nsp	C,CERAMIC HIK DISC	B0.01μF-K/50V-5RE	D004103277050
C117		*EX000100R	*EX000100R	C,ELECT GE 85C	10000μF-M/16V,18*35L.BLK SY	D040104083000
C118		*EX000120R	*EX000120R	C,ELECT GE 85C	2200μF-M/16V,12.5*20	D040222083210
C119		*EA001140R	*EA001140R	C,ELECT GE 85C	15000μF-M/71V 35*75 BULK(SNAPIN) SAGUB	D040153089310
C120		*EA001140R	*EA001140R	C,ELECT GE 85C	15000μF-M/71V 35*75 BULK(SNAPIN) SAGUB	D040153089310
C121		nsp	OA10605020	CAP.E.GENERIC	10μF/50V(M) 5x11,P=5(LUXON-GR) 85,2000H	N211210078110
C122		*OF100250R	*OF100250R	C,FILM POLYESTER	RED-0.1μF-K/250V-5RE	D02010407H080
C123		*OF100250R	*OF100250R	C,FILM POLYESTER	RED-0.1μF-K/250V-5RE	D02010407H080
C124		nsp	nsp	C,CERAMIC HIK DISC	B0.01μF-K/50V-5RE	D004103277050
C125						
ʃ		nsp	OA10505020	CAP.E.GENERIC	1μF/50V(M) 5x11,P=5(LUXON-GR) 85,2000H	N211210978110
C129						
C132		nsp	OA10702520	CAP.E.GENERIC	100μF/25V(M) 6.3x11,P=5(LUXON-GR) 85,2000H	N211210148110
C135		nsp	nsp	C,CERAMIC HIK AXIAL	F0.1μF-Z/50V-52RE	D005104597530
C140		nsp	OA47505020	CAP.E.GENERIC	4.7μF/50V(M) 5x11,P=5(LUXON-GR) 85,2000H	N211247978110
C141		nsp	OA47701620	CAP.E.GENERIC	470μF/16V(M) 8x11,P=5(LUXON-GR) 85,2000H	N211247138110
C142		nsp	OA47701620	CAP.E.GENERIC	470μF/16V(M) 8x11,P=5(LUXON-GR) 85,2000H	N211247138110
C143		nsp	nsp	C,CERAMIC HIK AXIAL	F0.1μF-Z/50V-52RE	D005104597530
C144		nsp	nsp	C,CERAMIC HIK AXIAL	F0.1μF-Z/50V-52RE	D005104597530
C145		nsp	OA10610020	CAP.E.GENERIC	10μF/100V(M) 6.3x11,P=5(LUXON-GR) 85,2000H	N2112100C8110
C146		nsp	OA47601050	CAP.E.GENERIC	47μF/10V(M) 5X11,P=5(LUXON-GR) 85,2000H	N211247028110
C147		nsp	nsp	C,CERAMIC HIK AXIAL	F0.1μF-Z/50V-52RE	D005104597530
C148		nsp	nsp	C,CERAMIC HIK AXIAL	F0.1μF-Z/50V-52RE	D005104597530
C148A		nsp	nsp	C,CERAMIC HIK AXIAL	B0.001μF-K/50V-52RE	D005102177530
C149		nsp	OA47505020	CAP.E.GENERIC	4.7μF/50V(M) 5x11,P=5(LUXON-GR) 85,2000H	N211247978110
C150		nsp	OA47601640	CAP.E.GENERIC	47μF/16V(M) 5x11,P=5(LUXON-GR) 85,2000H	N211247038110
C151		*EX000080R	*EX000080R	C,ELECT GE 85C	8200μF-M/5.5V SY	D040822080010
C152		nsp	nsp	C,CERAMIC HIK AXIAL	B100pF-K/50V-52RE	D005101177520
C153	/N	nsp	nsp	C,CERAMIC HIK AXIAL	F0;1μF-Z/50V-52RE	D005104597530
C154	/N	nsp	nsp	C,CERAMIC T.C DISC	CH27pF-J/50V-5RE	D00027016705C
C155	/N	nsp	nsp	C,CERAMIC T.C DISC	CH27pF-J/50V-5RE	D00027016705C
C156	/N	nsp	OA10605020	CAP.E.GENERIC	10μF/50V(M) 5x11,P=5(LUXON-GR) 85,2000H	N211210078110
C157	/N	nsp	nsp	C,CERAMIC HIK AXIAL	B270pF-K/50V-52RE	D005271277520
C158	/N	nsp	OA47601640	CAP.E.GENERIC	47μF/16V(M) 5x11,P=5(LUXON-GR) 85,2000H	N211247038110
C159	/N	nsp	nsp	C,CERAMIC SEMI DISC	F0.1μF-Z/50V-5RE PI6	D006104597050
IC108	/N	*HC107330R	*HC107330R	IC,ANALOG	TDA7330BD-SOP20P /RDS DEMODULATOR	J080733000010
J121						
ʃ	/N	nsp	nsp	CN,WIRE 1P	JUMPER (0.6/52MM)	L045084006040
J263						
C160						
ʃ		nsp	nsp	C,CERAMIC HIK AXIAL	B100pF-K/50V-52RE	D005101177520
C163						
C164		nsp	nsp	C,CERAMIC HIK AXIAL	B220pF-K/50V-52RE	D005221277520
C164A		nsp	nsp	C,CERAMIC HIK AXIAL	F0.1μF-Z/50V-52RE	D005104597530
C169						
ʃ		nsp	nsp	C,CERAMIC HIK AXIAL	F0.047μF-Z/50V-52RE	D005473597520
C173						
C174		nsp	OA22702520	CAP.E.GENERIC	220μF/25V(M) 8x11,P=5(LUXON-GR) 85,2000H	N211222148110

NOTE : "nsp" PART IS LISTED FOR REFERENCE ONLY, MARANTZ WILL NOT SUPPLY THESE PARTS.

POS. NO	VERS. COLOR	PART NO. (FOR EUR)	PART NO. (MJI)	DESCRIPTION		
CN101		nsp	nsp	CN,WAFER 2.5MM	5267-06A 6P	L102526700600
CN102		nsp	nsp	CN,WAFER 3.96MM	35328-0310	L104353280300
CN103		nsp	nsp	CN,WAFER 2.5MM	5267-03A 3P	L102526700300
CN104		nsp	nsp	CN,WAFER 2.5MM	5267-10A 10P	L102526701000
CN105		nsp	nsp	CN,WAFER 2.5MM	5267-09A 9P	L102526700900
CN107		nsp	nsp	CN,WAFER 2.5MM	PLUG BD,BD 53421-1317 13P 2.5 ST ZIP	L102534211310
CN108		nsp	nsp	CN,WAFER 2.0MM	TUC-P20P-B1 BD-TO-BD 20P WAFER ST	L101100042010
CN109		nsp	nsp	CN,WAFER 2.0MM	TUC-P20P-B1 BD-TO-BD 20P WAFER ST	L101100042010
CN110		nsp	nsp	CN,WAFER 2.0MM	TUC-P10P-B1 BD-TO-BD 10P WAFER ST	L101100041010
CN111		nsp	nsp	CN,WAFER 2.0MM	TUC-P16P-B1 BD-TO-BD 16P WAFER ST	L101100041610
CN112		nsp	nsp	CN,WAFER 2.0MM	TUC-P14P-B1 BD-TO-BD 14P WAFER ST	L101100041410
CN113		nsp	nsp	CN,WAFER 2.0MM	TUC-P14P-B1 BD-TO-BD 14P WAFER ST	L101100041410
CN114		nsp	nsp	CN,WAFER 2.0MM	TUC-P16P-B1 BD-TO-BD 16P WAFER ST	L101100041610
CN115		nsp	nsp	CN,WAFER 2.0MM	TUC-P18P-B1 BD-TO-BD 18P WAFER ST	L101100041810
CN116		nsp	nsp	CN,WAFER 2.0MM	TUC-P16P-B1 BD-TO-BD 16P WAFER ST	L101100041610
CN117		nsp	nsp	CN,WAFER 2.0MM	TUC-P20P-B1 BD-TO-BD 20P WAFER ST	L101100042010
CN118		nsp	nsp	CN,WAFER 2.0MM	35336-1310 13P	L101353361310
CNT106		nsp	nsp	CN,WIRE	240MM/4P YH396-4XB3951H03*2 TWIST	L000241040010
CNT119		nsp	nsp	CN,WIRE	420MM/4P GIL-S-4=9073-4 WH1007#26	L000421040010
D101						
ʃ		nsp	*HD201570R	D,SWITCHING	IN4007 52REEL 1000V 1A	K000400700520
D105						
D106A		*HE200310R	*HE200310R	D,RECTIFIER BRIDGE	DIODE BRIDGE GBJ1006 600V/10A	K047100600010
D107A		*HE200310R	*HE200310R	D,RECTIFIER BRIDGE	DIODE BRIDGE GBJ1006 600V/10A	K047100600010
D108		nsp	*HD201570R	D,SWITCHING	IN4007 52REEL 1000V 1A	K000400700520
D109		nsp	*HD201570R	D,SWITCHING	IN4007 52REEL 1000V 1A	K000400700520
D110		nsp	*HD201720R	D,SWITCHING	1N4148-52RE 75V 150MA DO-34 (MIC)	K000414803520
D110A		nsp	*HD201720R	D,SWITCHING	1N4148-52RE 75V 150MA DO-34 (MIC)	K000414803520
D111		nsp	*HD201570R	D,SWITCHING	IN4007 52REEL 1000V 1A	K000400700520
D113						
ʃ		nsp	*HD201720R	D,SWITCHING	1N4148-52RE 75V 150MA DO-34 (MIC)	K000414803520
D129						
FPC101		*YU000930R	*YU000930R	CABLE FLAT CARD	FPC23P FPC101A&FPC101B	L301241230010
FPC101A		nsp	nsp	CN,FPC 1.25MM	8370-231 23P ST	L131837002300
GND101						
ʃ		nsp	nsp	TERMINAL	ALL PBST/GND PLATE-REEL	3790040876010
GND107						
IC101		HC38915090	HC38915090	IC,LINEAR-REGULATOR	MC7815CT TO220 (ON SEMI)(METAL TYPE)	J126781500070
IC102		*HC300200R	*HC300200R	IC,LINEAR-REGULATOR	KIA7915PI,20W-TO220IS MOLD	J126791500030
IC103		HC38905090	HC38905090	IC,LINEAR-REGULATOR	MC7805CT TO220 (ON SEMI)(METAL TYPE)	J126780500380
IC104		HC38905090	HC38905090	IC,LINEAR-REGULATOR	MC7805CT TO220 (ON SEMI)(METAL TYPE)	J126780500380
IC105		*HC300190R	*HC300190R	IC,LINEAR-REGULATOR	KIA7905PI,20W-TO220IS MOLD	J126790500070
IC106		*HC400020R	*HC400020R	IC,LOGIC	CD4094BCN DIP16 /8BIT SHIFT REGISTER	J040409400050
IC107		*HU100610R	*HU100610R	IC,CPU	CXP740010-163Q DWP586 QFP100 /SR5300	J020740010163
J101						
ʃ		nsp	nsp	CN,WIRE 1P	JUMPER (0.6/52MM)	L045084006040
J300						
Q101		*HT100340R	*HT100340R	SEMI,TR/GE PNP 2SA	KTA1268BL,0.3W/TO92-REEL	J5001268B0050
Q102		*HT700050R	*HT700050R	SEMI,TR/GE NPN 2SC	KTC3200BL,0.6W/TO92-REEL	J5023200B0050
Q103		*HT100340R	*HT100340R	SEMI,TR/GE PNP 2SA	KTA1268BL,0.3W/TO92-REEL	J5001268B0050
Q104		*HT100340R	*HT100340R	SEMI,TR/GE PNP 2SA	KTA1268BL,0.3W/TO92-REEL	J5001268B0050
Q105		*HT700050R	*HT700050R	SEMI,TR/GE NPN 2SC	KTC3200BL,0.6W/TO92-REEL	J5023200B0050
Q106		*HT100340R	*HT100340R	SEMI,TR/GE PNP 2SA	KTA1268BL,0.3W/TO92-REEL	J5001268B0050
Q107		*HT700050R	*HT700050R	SEMI,TR/GE NPN 2SC	KTC3200BL,0.6W/TO92-REEL	J5023200B0050
Q108						
ʃ		*BA001190R	*BA001190R	SEMI,BRT/NPN RC	KRC107M,0.4W/TO92M-REEL	J6020107M0010
Q112						
Q115		*HT700050R	*HT700050R	SEMI,TR/GE NPN 2SC	KTC3200BL,0.6W/TO92-REEL	J5023200B0050
Q116		*HT700050R	*HT700050R	SEMI,TR/GE NPN 2SC	KTC3200BL,0.6W/TO92-REEL	J5023200B0050
Q117		*HT100340R	*HT100340R	SEMI,TR/GE PNP 2SA	KTA1268BL,0.3W/TO92-REEL	J5001268B0050
Q118		*HT100340R	*HT100340R	SEMI,TR/GE PNP 2SA	KTA1268BL,0.3W/TO92-REEL	J5001268B0050
Q119		*HT700050R	*HT700050R	SEMI,TR/GE NPN 2SC	KTC3200BL,0.6W/TO92-REEL	J5023200B0050
Q120		*HT700050R	*HT700050R	SEMI,TR/GE NPN 2SC	KTC3200BL,0.6W/TO92-REEL	J5023200B0050
Q122		*BA001210R	*BA001210R	SEMI,BRT/PNP RA	KRA102M,0.3W/TO92M-REEL	J6002202M0010

NOTE : "nsp" PART IS LISTED FOR REFERENCE ONLY, MARANTZ WILL NOT SUPPLY THESE PARTS.

SR6300

POS. NO	VERS. COLOR	PART NO. (FOR EUR)	PART NO. (MJI)	DESCRIPTION		
Q123		*BA001180R	*BA001180R	SEMI,BRT/NPN RC	KRC102M,0.4W/TO92M-REEL	J6020102M0010
Q124		*BA001210R	*BA001210R	SEMI,BRT/PNP RA	KRA102M,0.3W/TO92M-REEL	J6002202M0010
Q128		*BA001210R	*BA001210R	SEMI,BRT/PNP RA	KRA102M,0.3W/TO92M-REEL	J6002202M0010
Q129		*BA001180R	*BA001180R	SEMI,BRT/NPN RC	KRC102M,0.4W/TO92M-REEL	J6020102M0010
Q130		*BA001190R	*BA001190R	SEMI,BRT/NPN RC	KRC107M,0.4W/TO92M-REEL	J6020107M0010
Q131						
ʃ		*BA001420R	*BA001420R	SEMI,BRT/PNP RA	DTA114YS,0.3W/TO92M-REEL	J6000114Y0010
Q135						
Q136		*HT100590R	*HT100590R	SEMI,TR/GE PNP 2SA	KSA992F,0.5W/TO92-REEL	J5000992F0050
R101						
ʃ		nsp	nsp	R,METAL FILM 100PPM	0.22-J,1W-R,REEL	C060R22065050
R104						
R105C						
ʃ		nsp	nsp	R,METAL FILM 100PPM	10-J,2W-52RE-AX	C060010066520
R105SR						
R107		nsp	nsp	R,CARBON FILM	2.2K-J,1/5W-52RE-AX	C00002226P520
R108		nsp	nsp	R,CARBON FILM	2.2K-J,1/5W-52RE-AX	C00002226P520
R109		nsp	nsp	R,CARBON FILM	560K-J,1/5W-52RE-AX	C00005646P520
R110		nsp	nsp	R,CARBON FILM	3.6K-J,1/5W-52RE-AX	C00003626P520
R111		nsp	nsp	R,CARBON FILM	22K-J,1/5W-52RE-AX	C00002236P520
R112		nsp	nsp	R,CARBON FILM	1.2K-J,1/5W-52RE-AX	C00001226P520
R113		nsp	nsp	R,CARBON FILM	1K-J,1/5W-52RE-AX	C00001026P520
R114		*GO000011R	*GO000011R	R,CEMENT MPR	0.1-J/5W,W14*H17	C144R10069110
R115		*GO000011R	*GO000011R	R,CEMENT MPR	0.1-J/5W,W14*H17	C144R10069110
R116		nsp	nsp	R,CARBON FILM	27K-J,1/5W-52RE-AX	C00002736P520
R117		nsp	nsp	R,CARBON FILM	27K-J,1/5W-52RE-AX	C00002736P520
R118		nsp	nsp	R,CARBON FILM	2.2K-J,1/5W-52RE-AX	C00002226P520
R119		nsp	nsp	R,CARBON FILM	2.2K-J,1/5W-52RE-AX	C00002226P520
R120		nsp	nsp	R,CARBON FILM	560K-J,1/5W-52RE-AX	C00005646P520
R122						
ʃ		nsp	nsp	R,CARBON FILM	27K-J,1/5W-52RE-AX	C00002736P520
R127						
R128		nsp	nsp	R,CARBON FILM	51K-J,1/5W-52RE-AX	C00005136P520
R129		nsp	nsp	R,CARBON FILM	51K-J,1/5W-52RE-AX	C00005136P520
R130		nsp	nsp	R,CARBON FILM	15K-J,1/5W-52RE-AX	C00001536P520
R131		nsp	nsp	R,CARBON FILM	33K-J,1/5W-52RE-AX	C00003336P520
R133		nsp	nsp	R,CARBON FILM	2.2K-J,1/5W-52RE-AX	C00002226P520
R134		nsp	nsp	R,CARBON FILM	100K-J,1/5W-52RE-AX	C00001046P520
R137						
ʃ		nsp	nsp	R,CARBON FILM	22K-J,1/5W-52RE-AX	C00002236P520
R142						
R143		nsp	nsp	R,CARBON FILM	3.3K-J,1/5W-52RE-AX	C00003326P520
R144		nsp	nsp	R,CARBON FILM	15K-J,1/5W-52RE-AX	C00001536P520
R146		nsp	nsp	R,METAL FILM 100PPM	1.2K-J,1W-5REEL	C060012265050
R147		nsp	nsp	R,CARBON FILM	22K-J,1/5W-52RE-AX	C00002236P520
R148		nsp	nsp	R,CARBON FILM	22K-J,1/5W-52RE-AX	C00002236P520
R149		nsp	nsp	R,CARBON FILM	1K-J,1/5W-52RE-AX	C00001026P520
R150		nsp	nsp	R,CARBON FILM	18K-J,1/5W-52RE-AX	C00001836P520
R151		nsp	nsp	R,CARBON FILM	1K-J,1/5W-52RE-AX	C00001026P520
R152		nsp	nsp	R,METAL FILM 100PPM	1.2K-J,1W-5REEL	C060012265050
R153		nsp	nsp	R,CARBON FILM	1K-J,1/5W-52RE-AX	C00001026P520
R154		nsp	nsp	R,METAL FILM 100PPM	1.2K-J,1W-5REEL	C060012265050
R155		nsp	nsp	R,CARBON FILM	4.7K-J,1/5W-52RE-AX	C00004726P520
R156		nsp	nsp	R,CARBON FILM	100K-J,1/5W-52RE-AX	C00001046P520
R157		nsp	nsp	R,CARBON FILM	100K-J,1/5W-52RE-AX	C00001046P520
R158		nsp	nsp	R,CARBON FILM	100K-J,1/5W-52RE-AX	C00001046P520
R159		nsp	nsp	R,CARBON FILM	1K-J,1/5W-52RE-AX	C00001026P520
R161		nsp	nsp	R,CARBON FILM	1M-J,1/5W-52RE-AX	C00001056P520
R162		nsp	nsp	R,CARBON FILM	47K-J,1/5W-52RE-AX	C00004736P520
R165		nsp	*nsp	R,CARBON FILM	4.7K-J,1/5W-52RE-AX	C00004726P520
R166		nsp	nsp	R,CARBON FILM	47K-J,1/5W-52RE-AX	C00004736P520
R167		nsp	nsp	R,CARBON FILM	10K-J,1/5W-52RE-AX	C00001036P520
R168		nsp	nsp	R,CARBON FILM	47K-J,1/5W-52RE-AX	C00004736P520
R169		nsp	nsp	R,CARBON FILM	220-J,1/5W-52RE-AX	C00002216P520

NOTE : "nsp" PART IS LISTED FOR REFERENCE ONLY, MARANTZ WILL NOT SUPPLY THESE PARTS.

SR6300

POS. NO	VERS. COLOR	PART NO. (FOR EUR)	PART NO. (MJI)	DESCRIPTION		
R170		nsp	nsp	R,CARBON FILM	100K-J,1/5W-52RE-AX	C00001046P520
R171		nsp	nsp	R,CARBON FILM	47K-J,1/5W-52RE-AX	C00004736P520
R172	/K/N	nsp	nsp	R,CARBON FILM	10K-J,1/5W-52RE-AX	C00001036P520
R173	/K	nsp	nsp	R,CARBON FILM	15K-J,1/5W-52RE-AX	C00001536P520
R173	/N/U	nsp	nsp	R,CARBON FILM	47K-J,1/5W-52RE-AX	C00004736P520
R183	/K/U	nsp	nsp	R,CARBON FILM	47K-J,1/5W-52RE-AX	C00004736P520
R182	/N	nsp	nsp	R,CARBON FILM	2.2M-J,1/5W-52RE-AX	C00002256P520
R174		nsp	nsp	R,CARBON FILM	47K-J,1/5W-52RE-AX	C00004736P520
R176		nsp	nsp	R,CARBON FILM	47K-J,1/5W-52RE-AX	C00004736P520
R177		nsp	nsp	R,CARBON FILM	470K-J,1/5W-52RE-AX	C00004746P520
R178		nsp	nsp	R,CARBON FILM	100-J,1/5W-52RE	C00001016P520
R179		nsp	nsp	R,CARBON FILM	47K-J,1/5W-52RE-AX	C00004736P520
R181		nsp	nsp	R,CARBON FILM	10K-J,1/5W-52RE-AX	C00001036P520
R187	/N	nsp	nsp	R,CARBON FILM	47K-J,1/5W-52RE-AX	C00004736P520
R188	/N	nsp	nsp	R,CARBON FILM	47K-J,1/5W-52RE-AX	C00004736P520
R191	/N	nsp	nsp	R,CARBON FILM	560-J,1/5W-52RE-AX	C00005616P520
XTAL102	/N	*JX001000R	*JX001000R	CRYSTAL	4.332MHZ;CL=20.8pF HC49U	E8004R3320080
ZD129	/N	HD30511000	HD30511000	D,ZENER	MTZJ5.1B-0.5W/5MA-52MM	K06005R144520
R184		nsp	nsp	R,CARBON FILM	10K-J,1/5W-52RE-AX	C00001036P520
R185		nsp	nsp	R,CARBON FILM	100K-J,1/5W-52RE-AX	C00001046P520
R186		nsp	nsp	R,CARBON FILM	100K-J,1/5W-52RE-AX	C00001046P520
R189		nsp	nsp	R,CARBON FILM	10K-J,1/5W-52RE-AX	C00001036P520
R190		nsp	nsp	R,CARBON FILM	10K-J,1/5W-52RE-AX	C00001036P520
R192		nsp	nsp	R,CARBON FILM	47K-J,1/5W-52RE-AX	C00004736P520
R193		nsp	nsp	R,METAL FILM 100PPM	3.3-J,1W-52RE-AX	C0603R3065520
R194						
ʃ		nsp	nsp	R,CARBON FILM	10K-J,1/5W-52RE-AX	C00001036P520
R198						
R199		nsp	nsp	R,CARBON FILM	1K-J,1/5W-52RE-AX	C00001026P520
R200		nsp	nsp	R,CARBON FILM	47K-J,1/5W-52RE-AX	C00004736P520
R202		nsp	nsp	R,METAL FILM 100PPM	100-J,1/4W-R,REEL	C060010163050
RLY102						
ʃ		LY20240490	LY20240490	RELAY	G5PA-28 24V 5A	G6802405020 20
RLY106						
XTAL101		*FQ000530R	*FQ000530R	RESONATOR,CERAMIC	CST12.0MTW-TF01/REEL CSTLA12M0T55-A0	E830120000050
ZD121		HD30511000	HD30511000	D,ZENER	MTZJ5.1B-0.5W/5MA-52MM	K06005R144520
ZD122		HD30511000	HD30511000	D,ZENER	MTZJ5.1B-0.5W/5MA-52MM	K06005R144520
				FRONT PCB		
FIP301		*HQ300570R	*HQ300570R	DISPLAY,FLT	HNA-15MM25 130*33.5 GRN,ORG /R963	K530152500010
-		nsp	nsp	HOLDER	D-M2(L) ABS BK/FLT	4320210091010
VOL301		*SR000200R	*SR000200R	SW,ENCODER	EC16B24T01D4-ZZZ	G121162401400
JACK382		*YT002830R	*YT002830R	TER,RCA 3PIN	JACK RCA 3P(FRONT-YWR)/JC03W0191G	G606040320000
C301		nsp	OA47601050	CAP,E.GENERIC	47μF/10V(M) 5X11,P=5(LUXON-GR) 85,2000H	N211247028110
C302		nsp	nsp	C,CERAMIC HIK AXIAL	F0.022μF-Z/25V-52RE	D005223594520
C303		nsp	nsp	C,CERAMIC HIK AXIAL	F0.047μF-Z/50V-52RE	D005473597520
C304		nsp	nsp	C,CERAMIC HIK AXIAL	B100pF-K/50V-52RE	D005101177520
C305		nsp	OA10605020	CAP,E.GENERIC	10μF/50V(M) 5x11,P=5(LUXON-GR) 85,2000H	N211210078110
C306		nsp	nsp	C,CERAMIC HIK AXIAL	F0.047μF-Z/50V-52RE	D005473597520
C307		nsp	OA10605020	CAP,E.GENERIC	10μF/50V(M) 5x11,P=5(LUXON-GR) 85,2000H	N211210078110
C308		nsp	nsp	C,CERAMIC HIK AXIAL	F0.022μF-Z/25V-52RE	D005223594520
C309		nsp	nsp	C,CERAMIC HIK AXIAL	B100pF-K/50V-52RE	D005101177520
C310		nsp	nsp	C,CERAMIC HIK AXIAL	F0.047μF-Z/50V-52RE	D005473597520
C311		nsp	nsp	C,CERAMIC HIK AXIAL	B100pF-K/50V-52RE	D005101177520
C312		nsp	nsp	C,CERAMIC HIK AXIAL	B100pF-K/50V-52RE	D005101177520
C313		nsp	OA10605020	CAP,E.GENERIC	10μF/50V(M) 5x11,P=5(LUXON-GR) 85,2000H	N211210078110
C314		nsp	OA10605020	CAP,E.GENERIC	10μF/50V(M) 5x11,P=5(LUXON-GR) 85,2000H	N211210078110
C315		nsp	nsp	C,CERAMIC HIK AXIAL	B820pF-K/50V-52RE	D005821287520
C316		nsp	nsp	C,CERAMIC HIK AXIAL	B820pF-K/50V-52RE	D005821287520
C317		nsp	OA10605020	CAP,E.GENERIC	10μF/50V(M) 5x11,P=5(LUXON-GR) 85,2000H	N211210078110
C318						
ʃ		nsp	nsp	C,CERAMIC HIK AXIAL	B100pF-K/50V-52RE	D005101177520
C321						
C322		nsp	nsp	C,CERAMIC HIK AXIAL	F0.1μF-Z/50V-52RE	D005104597530

NOTE : "nsp" PART IS LISTED FOR REFERENCE ONLY, MARANTZ WILL NOT SUPPLY THESE PARTS.

POS. NO	VERS. COLOR	PART NO. (FOR EUR)	PART NO. (MJI)	DESCRIPTION		
C323		nsp	nsp	C,CERAMIC HIK AXIAL	F0.1μF-Z/50V-52RE	D005104597530
CNT301		nsp	nsp	CN,WIRE	450/9 B2011-9=GILS-3,2,4 WH2547#26+BK1533#26	L000451090030
CNT303		nsp	nsp	CN,WIRE	100MM/4P 9073-04=9073-04 WH1007#26	L000101040060
CNT304		nsp	nsp	CN,WIRE	470MM/5P GILS-5=9073-5 WH1007#26	L000471050010
CNT305		nsp	nsp	CN,WIRE	80/3P GILS-03=9073-03 RD1007#26	L000800030030
D301		nsp	*HD201720R	D,SWITCHING	1N4148-52RE 75V 150MA DO-34 (MIC)	K000414803520
D315		*HI101020R	*HI101020R	LED,ROUND	LED SLR-34URCF25	K500032101120
D316M		*HI101020R	*HI101020R	LED,ROUND	LED SLR-34URCF25	K500032101120
D317		nsp	*HD201720R	D,SWITCHING	1N4148-52RE 75V 150MA DO-34 (MIC)	K000414803520
D318		*HI101020R	*HI101020R	LED,ROUND	LED SLR-34URCF25	K500032101120
D319		*HI101020R	*HI101020R	LED,ROUND	LED SLR-34URCF25	K500032101120
D320		*HI101020R	*HI101020R	LED,ROUND	LED SLR-34URCF25	K500032101120
D328		*HD301990R	*HD301990R	D,ZENER	MTZJ11B-0.5W/5MA-52MM	K06011R044520
D332						
ʃ		nsp	*HD201720R	D,SWITCHING	1N4148-52RE 75V 150MA DO-34 (MIC)	K000414803520
D337						
FPC101B		nsp	nsp	CN,FPC 1.25MM	52492-2320 23P BOTTOM ENTRY	L131524922320
IC301		*HC107290R	*HC107290R	IC,LINEAR-DRIVER	LC75721E/QIP64	J127757210010
J301						
ʃ		nsp	nsp	CN,WIRE 1P	JUMPER (0.6/52MM)	L045084006040
J341						
JACK381		*YT002530R	*YT002530R	JACK,D6.5	C40160250N	G402041810000
L302		nsp	nsp	COIL,FILTER-INDUCTOR	10UH-Q40/24M-R2.5-52RE 02TB	D330100700520
Q301		*BA001190R	*BA001190R	SEMI,BRT/NPN RC	KRC107M,0.4W/TO92M-REEL	J6020107M0010
Q302		*BA001200R	*BA001200R	SEMI,BRT/PNP RA	KRA111M,0.4W/TO92M-REEL	J6000111M0010
Q303M						
ʃ		*BA001190R	*BA001190R	SEMI,BRT/NPN RC	KRC107M,0.4W/TO92M-REEL	J6020107M0010
Q308						
Q309		*HT700050R	*HT700050R	SEMI,TR/GE NPN 2SC	KTC3200BL,0.6W/TO92-REEL	J5023200B0050
R301		nsp	nsp	R,CARBON FILM	68K-J,1/5W-52RE-AX	C00006836P520
R302		nsp	nsp	R,CARBON FILM	68K-J,1/5W-52RE-AX	C00006836P520
R303		nsp	nsp	R,CARBON FILM	330-J,1/5W-52RE-AX	C00003316P520
R304		nsp	nsp	R,CARBON FILM	100-J,1/5W-52RE	C00001016P520
R305		nsp	nsp	R,CARBON FILM	120-J,1/5W-52RE-AX	C00001216P520
R306		nsp	nsp	R,CARBON FILM	150-J,1/5W-52RE-AX	C00001516P520
R307		nsp	nsp	R,CARBON FILM	150-J,1/5W-52RE-AX	C00001516P520
R308		nsp	nsp	R,CARBON FILM	270-J,1/5W-52RE-AX	C00002716P520
R309		nsp	nsp	R,CARBON FILM	270-J,1/5W-52RE-AX	C00002716P520
R310		nsp	nsp	R,CARBON FILM	470-J,1/5W-52RE-AX	C00004716P520
R311		nsp	nsp	R,CARBON FILM	820-J,1/5W-52RE-AX	C00008216P520
R312		nsp	nsp	R,CARBON FILM	1K-J,1/5W-52RE-AX	C00001026P520
R313		nsp	nsp	R,CARBON FILM	120-J,1/5W-52RE-AX	C00001216P520
R314		nsp	nsp	R,CARBON FILM	150-J,1/5W-52RE-AX	C00001516P520
R315		nsp	nsp	R,CARBON FILM	150-J,1/5W-52RE-AX	C00001516P520
R316		nsp	nsp	R,CARBON FILM	270-J,1/5W-52RE-AX	C00002716P520
R317		nsp	nsp	R,CARBON FILM	270-J,1/5W-52RE-AX	C00002716P520
R318		nsp	nsp	R,CARBON FILM	470-J,1/5W-52RE-AX	C00004716P520
R319		nsp	nsp	R,CARBON FILM	820-J,1/5W-52RE-AX	C00008216P520
R322		nsp	nsp	R,CARBON FILM	1K-J,1/5W-52RE-AX	C00001026P520
R323		nsp	nsp	R,CARBON FILM	270-J,1/5W-52RE-AX	C00002716P520
R325		nsp	nsp	R,CARBON FILM	150-J,1/5W-52RE-AX	C00001516P520
R326		nsp	nsp	R,CARBON FILM	270-J,1/5W-52RE-AX	C00002716P520
R327		nsp	nsp	R,CARBON FILM	270-J,1/5W-52RE-AX	C00002716P520
R328		nsp	nsp	R,CARBON FILM	470-J,1/5W-52RE-AX	C00004716P520
R329		nsp	nsp	R,CARBON FILM	820-J,1/5W-52RE-AX	C00008216P520
R330		nsp	nsp	R,CARBON FILM	1.5K-J,1/5W-52RE-AX	C00001526P520
R332		nsp	nsp	R,CARBON FILM	1K-J,1/5W-52RE-AX	C00001026P520
R333		nsp	nsp	R,CARBON FILM	10K-J,1/5W-52RE-AX	C00001036P520
R334		nsp	nsp	R,CARBON FILM	1K-J,1/5W-52RE-AX	C00001026P520
R335		nsp	nsp	R,CARBON FILM	1K-J,1/5W-52RE-AX	C00001026P520
R336		nsp	nsp	R,CARBON FILM	1K-J,1/5W-52RE-AX	C00001026P520
R337M		nsp	nsp	R,CARBON FILM	330-J,1/5W-52RE-AX	C00003316P520
R338		nsp	nsp	R,CARBON FILM	1K-J,1/5W-52RE-AX	C00001026P520
R340		nsp	nsp	R,CARBON FILM	330-J,1/5W-52RE-AX	C00003316P520

NOTE : "nsp" PART IS LISTED FOR REFERENCE ONLY, MARANTZ WILL NOT SUPPLY THESE PARTS.

POS. NO	VERS. COLOR	PART NO. (FOR EUR)	PART NO. (MJI)	DESCRIPTION		
R341		nsp	nsp	R,CARBON FILM	330-J,1/5W-52RE-AX	C00003316P520
R342		nsp	nsp	R,CARBON FILM	47K-J,1/5W-52RE-AX	C00004736P520
R343		nsp	nsp	R,CARBON FILM	75-J,1/5W-52RE-AX	C00007506P520
R344		nsp	nsp	R,CARBON FILM	75-J,1/5W-52RE-AX	C00007506P520
R345		nsp	nsp	R,CARBON FILM	75-J,1/5W-52RE-AX	C00007506P520
R346		nsp	nsp	R,CARBON FILM	47K-J,1/5W-52RE-AX	C00004736P520
R347		nsp	nsp	R,CARBON FILM	470-J,1/5W-52RE-AX	C00004716P520
R348		nsp	nsp	R,CARBON FILM	100K-J,1/5W-52RE-AX	C00001046P520
R349		nsp	nsp	R,CARBON FILM	10K-J,1/5W-52RE-AX	C00001036P520
R350		nsp	nsp	R,CARBON FILM	100K-J,1/5W-52RE-AX	C00001046P520
R351		nsp	nsp	R,CARBON FILM	47K-J,1/5W-52RE-AX	C00004736P520
R352		nsp	nsp	R,CARBON FILM	470-J,1/5W-52RE-AX	C00004716P520
R353		nsp	nsp	R,CARBON FILM	2.2K-J,1/5W-52RE-AX	C00002226P520
R354		nsp	nsp	R,CARBON FILM	330-J,1/5W-52RE-AX	C00003316P520
R355M						
ʃ		nsp	nsp	R,CARBON FILM	24K-J,1/5W-52RE-AX	C00002436P520
R359						
R360		nsp	nsp	R,CARBON FILM	330-J,1/5W-52RE-AX	C00003316P520
RMC301		*HW100630R	*HW100630R	MODULE,REMOCON	RPM7136-H4 36.0KHZ	E940713640000
SILD		nsp	nsp	SUPPORTER	SPTE 0.2t / FRONT GND	4070210266000
SW301						
ʃ		*SP001140R	*SP001140R	SW,TACT	SKHV10920A,5MM/260G-REEL	G180000270010
SW324						
				INPUT1 PCB		
C417						
ʃ	/K/N	nsp	nsp	C,CERAMIC HIK AXIAL	B100pF-K/50V-52RE	D005101177520
C432						
C435						
ʃ		nsp	OA47505020	CAP,E,GENERIC	4.7μF/50V(M) 5x11,P=5(LUXON-GR) 85,2000H	N211247978110
C438						
C439		nsp	OA10505020	CAP,E,GENERIC	1μF/50V(M) 5x11,P=5(LUXON-GR) 85,2000H	N211210978110
C440		nsp	OA10505020	CAP,E,GENERIC	1μF/50V(M) 5x11,P=5(LUXON-GR) 85,2000H	N211210978110
C441						
ʃ		nsp	OA47505020	CAP,E,GENERIC	4.7μF/50V(M) 5x11,P=5(LUXON-GR) 85,2000H	N211247978110
C444						
C445		nsp	nsp	C,CERAMIC HIK AXIAL	B100pF-K/50V-52RE	D005101177520
C446		nsp	nsp	C,CERAMIC HIK AXIAL	B100pF-K/50V-52RE	D005101177520
C447		nsp	nsp	C,CERAMIC HIK AXIAL	B100pF-K/50V-52RE	D005101177520
C498		nsp	nsp	C,CERAMIC HIK AXIAL	F0.1μF-Z/50V-52RE	D005104597530
C499		nsp	nsp	C,CERAMIC HIK AXIAL	F0.1μF-Z/50V-52RE	D005104597530
CN301I		nsp	nsp	CN,WAFER 2.0MM	G1L-S-3P-S2T2-EF	L101220030000
CP110		nsp	nsp	CN,WAFER 2.0MM	TUC-P10X-B1 BD-TO-BD 10P HOUSING ST	L101100031010
CP111		nsp	nsp	CN,WAFER 2.0MM	TUC-P16X-B1 BD-TO-BD 16P HOUSING ST	L101100031610
IC401		*HC107320R	*HC107320R	IC,LOGIC	TC9274N-011 SDIP42-P-600 /ANALOG SW	J040927400030
IC403		HC10053090	HC10053090	IC,LINEAR OP	NJM2068DD-DIP8P	J121206800000
IC404		HC10053090	HC10053090	IC,LINEAR OP	NJM2068DD-DIP8P	J121206800000
J418						
ʃ		nsp	nsp	CN,WIRE 1P	JUMPER (0.6/52MM)	L045084006040
J472						
JACK401		*YT001600R	*YT001600R	TER,RCA 4PIN	DAERYUNG/JK0400450N	G602040045000
JACK402		*YT002640R	*YT002640R	TER,RCA 6PIN	DAERYUNG/JK060046CN(+2GND	G603060046020
JACK403		*YT002640R	*YT002640R	TER,RCA 6PIN	DAERYUNG/JK060046CN(+2GND	G603060046020
R433						
ʃ		nsp	nsp	R,CARBON FILM	470-J,1/5W-52RE-AX	C00004716P520
R449						
R466		nsp	nsp	R,CARBON FILM	150-J,1/5W-52RE-AX	C00001516P520
R467		nsp	nsp	R,CARBON FILM	4.7-J,1/5W-52RE-AX	C0004R706P520
R468		nsp	nsp	R,CARBON FILM	150-J,1/5W-52RE-AX	C00001516P520
R469		nsp	nsp	R,CARBON FILM	150-J,1/5W-52RE-AX	C00001516P520
R470		nsp	nsp	R,CARBON FILM	150-J,1/5W-52RE-AX	C00001516P520
R471						
ʃ		nsp	nsp	R,CARBON FILM	470K-J,1/5W-52RE-AX	C00004746P520
R474						

NOTE : "nsp" PART IS LISTED FOR REFERENCE ONLY, MARANTZ WILL NOT SUPPLY THESE PARTS.

SR6300

POS. NO	VERS. COLOR	PART NO. (FOR EUR)	PART NO. (MJI)	DESCRIPTION		
R475		nsp	nsp	R,CARBON FILM	4.7-J,1/5W-52RE-AX	C0004R706P520
R481						
ʃ		nsp	nsp	R,CARBON FILM	470K-J,1/5W-52RE-AX	C00004746P520
R484						
R487						
ʃ		nsp	nsp	R,CARBON FILM	150-J,1/5W-52RE-AX	C00001516P520
R490						
R495						
ʃ		nsp	nsp	R,CARBON FILM	470K-J,1/5W-52RE-AX	C00004746P520
R498						
R503		nsp	nsp	R,CARBON FILM	1K-J,1/5W-52RE-AX	C00001026P520
R504		nsp	nsp	R,CARBON FILM	1K-J,1/5W-52RE-AX	C00001026P520
R505		nsp	nsp	R,CARBON FILM	1K-J,1/5W-52RE-AX	C00001026P520
				INPUT2 PCB		
C448						
ʃ	/K/N	nsp	nsp	C,CERAMIC HIK AXIAL	B100pF-K/50V-52RE	D005101177520
C453						
C462		nsp	nsp	C,CERAMIC HIK AXIAL	Y0.01μF-M/16V-52RE	D005103773530
C463A		nsp	nsp	C,CERAMIC HIK AXIAL	F0.1μF-Z/50V-52RE	D005104597530
C468		nsp	nsp	C,CERAMIC HIK AXIAL	F0.1μF-Z/50V-52RE	D005104597530
C599		nsp	nsp	C,CERAMIC HIK AXIAL	F0.1μF-Z/50V-52RE	D005104597530
CP112		nsp	nsp	CN,WAFER 2.0MM	TUC-P14X-B1 BD-TO-BD 14P HOUSING ST	L101100031410
D501		nsp	*HD201720R	D,SWITCHING	1N4148-52RE 75V 150MA DO-34 (MIC)	K000414803520
D502		nsp	*HD201720R	D,SWITCHING	1N4148-52RE 75V 150MA DO-34 (MIC)	K000414803520
J465		nsp	nsp	CN,WIRE 1P	JUMPER (0.6/52MM)	L045084006040
J467		nsp	nsp	CN,WIRE 1P	JUMPER (0.6/52MM)	L045084006040
J501						
ʃ		nsp	nsp	CN,WIRE 1P	JUMPER (0.6/52MM)	L045084006040
J520						
JACK501		*YT002640R	*YT002640R	TER,RCA 6PIN	DAERYUNG/JK060046CN(+2GND	G603060046020
JACK502		*YT002600R	*YT002600R	TER,RCA 2PIN	DAERYUNG/JK020044HN	G601020044300
R448A						
ʃ		nsp	nsp	R,CARBON FILM	470K-J,1/5W-52RE-AX	C00004746P520
R453A						
R517						
ʃ		nsp	nsp	R,CARBON FILM	470-J,1/5W-52RE-AX	C00004716P520
R522						
R535		nsp	nsp	R,CARBON FILM	47-J,1/5W-52RE-AX	C00004706P520
				ST/BY LED PCB		
D303		*HI101020R	*HI101020R	LED,ROUND	LED SLR-34URCF25	K500032101120
				ST-BY S/W PCB		
SW325	/U	nsp	*SP001140R	SW,TACT	SKHV10920A,5MM/260G-REEL	G180000270010
J321						
ʃ	/U	nsp	nsp	CN,WIRE 1P	JUMPER (0.6/52MM)	L045084006040
J320						
				POWER SW PCB		
CNT401	/K/N	nsp	nsp	CN,WIRE	500MM 2P 35156-03,JE201-03 BK1617#22 7.92	L000501020020
⚠ SW401	/K/N	*SP001160R	*SP001160R	SW,PUSH	SDDL-005-S	G000122006030
				MULTI-CONTROL PCB		
C371		nsp	nsp	C,CERAMIC HIK AXIAL	B820pF-K/50V-52RE	D005821287520
C372		nsp	nsp	C,CERAMIC HIK AXIAL	B820pF-K/50V-52RE	D005821287520
CN305		nsp	nsp	CN,WAFER 2.0MM	GIL-S-03P-S2L2-EF	L101220030010
MVOL302		*SR000190R	*SR000190R	SW,ENCODER	EC16B12S00D4-ZZZ 12PULSE/360°	G121161200010
				H/P PCB		
C701L		nsp	nsp	C,CERAMIC HIK AXIAL	B560pF-K/50V-52RE	D005561277520
C701R		nsp	nsp	C,CERAMIC HIK AXIAL	B560pF-K/50V-52RE	D005561277520
C702		nsp	nsp	C,CERAMIC HIK AXIAL	F0.1μF-Z/50V-52RE	D005104597530
CNT122A		nsp	nsp	CN,WIRE	570MM/3P 5264-03X51088-03 RD1007#22	L000571030010

NOTE : "nsp" PART IS LISTED FOR REFERENCE ONLY, MARANTZ WILL NOT SUPPLY THESE PARTS

SR6300

POS. NO	VERS. COLOR	PART NO. (FOR EUR)	PART NO. (MJI)	DESCRIPTION		
JACK701		*YJ002590R	*YJ002590R	JACK,D6.5	JACK PHONE 3P H20380060G	G402041910010
R701L		nsp	nsp	R,METAL FILM 100PPM	RES MF 330 2W 5%	C060033166520
R701R		nsp	nsp	R,METAL FILM 100PPM	RES MF 330 2W 5%	C060033166520
WIRE701		nsp	nsp	RING,TER WIRE	200MM/1P 61640BS-2(PI3.2)=B1812TOP-2 BK	8410201010030
				SPK B PCB		
C951L	/K/N	*OF100270R	*OF100270R	C,FILM POLYESTER	ST-0.0022μF-J/100V-5RE	D02022206C060
C951R	/K/N	*OF100270R	*OF100270R	C,FILM POLYESTER	ST-0.0022μF-J/100V-5RE	D02022206C060
C952L	/K/N	nsp	nsp	C,CERAMIC HIK AXIAL	X0.0047μF-K/16V-52RE	D005472773530
C952R	/K/N	nsp	nsp	C,CERAMIC HIK AXIAL	X0.0047μF-K/16V-52RE	D005472773530
CN106		nsp	nsp	CN,WAFER 3.96MM	PLUG JE202A2T4 ANG4P	L104202000410
JACK901		*YT002780R	*YT002780R	TER,BOARD SCREW 4P	TERMINAL SH0410770P(B-TYPE)	G612040290000
				VOLTAGE SEL PCB		
-	/K	nsp	nsp	SUPPORTER	AVR1601(KE2) KIFCO(PS801) /P.C.	4070210192000
-	/K	nsp	nsp	SPACER	AVC1500(N) NYLON66 MPS-10-0/CARD	4300210062000
⚠ JK912	/K	nsp	*SS000720R	SW,SLIDE	3C2P,ESD26832A AC250V/5A	G060268320010
F913A	/K	nsp	nsp	HOLDER,FUSE CLIP	PI5.2-REEL	G645000050010
F913B	/K	nsp	nsp	HOLDER,FUSE CLIP	PI5.2-REEL	G645000050010
CNT711	/K	nsp	nsp	CN,WIRE	120MM/2P 35191-02=210-03 BK1617#22 7.92	L000121020050
J901						
ʃ	/K	nsp	nsp	CN,WIRE 1P	JUMPER (0.6/52MM)	L045084006040
J907						
CN951	/K	nsp	nsp	CN,WAFER 3.96MM	35328-0510	L104353280500
CN953	/K	nsp	nsp	CN,WAFER 7.92MM	35979-0320 3P ANGLE	L108359790320
⚠ F913	/K	nsp	*FS000960R	FUSE GLASS 20MM	T6.3A /250V-SVBRTC(K) 218	N751226301110
				PROCESSOR PCB		
C515xx		nsp	DD95101300	C,CERAMIC CHIP T.C	COG100pF-J/50V-1608REEL	D010101167160
C528xx		nsp	OA22505020	CAP.E.GENERIC	2.2μF/50V(M) 5x11,P=5(LUXON-GR) 85,2000H	N211222978110
C528SW		nsp	OA47505020	CAP.E.GENERIC	4.7μF/50V(M) 5x11,P=5(LUXON-GR) 85,2000H	N211247978110
C533xx		nsp	DD95101300	C,CERAMIC CHIP T.C	COG100pF-J/50V-1608REEL	D010101167160
C533SW		nsp	DK96122300	C,CERAMIC CHIP HIK	X7R1200pF-K/50V-1608REEL	D011122777716C
C541xx		nsp	DD95101300	C,CERAMIC CHIP T.C	COG100pF-J/50V-1608REEL	D010101167160
C543		nsp	DK96104300	C,CERAMIC CHIP HIK	X7R0.1μF-K/50V-1608REEL	D011104577160
C544		nsp	DK96104300	C,CERAMIC CHIP HIK	X7R0.1μF-K/50V-1608REEL	D011104577160
C545xx		nsp	OA47505020	CAP.E.GENERIC	4.7μF/50V(M) 5x11,P=5(LUXON-GR) 85,2000H	N211247978110
C546Fx		nsp	OA47505020	CAP.E.GENERIC	4.7μF/50V(M) 5x11,P=5(LUXON-GR) 85,2000H	N211247978110
C552						
ʃ		nsp	DK96104300	C,CERAMIC CHIP HIK	X7R0.1μF-K/50V-1608REEL	D011104577160
C556						
C557						
ʃ		nsp	OA47602520	CAP.E.GENERIC	47μF/25V(M) 5x11,P=5(LUXON-GR) 85,2000H	N211247048110
C560						
C561						
ʃ		nsp	DK96104300	C,CERAMIC CHIP HIK	X7R0.1μF-K/50V-1608REEL	D011104577160
C564						
C565		nsp	OA47602520	CAP.E.GENERIC	47μF/25V(M) 5x11,P=5(LUXON-GR) 85,2000H	N211247048110
C566		nsp	OA47602520	CAP.E.GENERIC	47μF/25V(M) 5x11,P=5(LUXON-GR) 85,2000H	N211247048110
C567		nsp	DK96104300	C,CERAMIC CHIP HIK	X7R0.1μF-K/50V-1608REEL	D011104577160
C568		nsp	DK96104300	C,CERAMIC CHIP HIK	X7R0.1μF-K/50V-1608REEL	D011104577160
C571x		nsp	OA47505020	CAP.E.GENERIC	4.7μF/50V(M) 5x11,P=5(LUXON-GR) 85,2000H	N211247978110
C576						
ʃ		nsp	DD95101300	C,CERAMIC CHIP T.C	COG100pF-J/50V-1608REEL	D010101167160
C584						
C585		nsp	DK96104300	C,CERAMIC CHIP HIK	X7R0.1μF-K/50V-1608REEL	D011104577160
C586		nsp	DK96104300	C,CERAMIC CHIP HIK	X7R0.1μF-K/50V-1608REEL	D011104577160
C587		nsp	OA10602550	CAP.E.GENERIC	10μF/25V(M) 5x11,P=5(LUXON-GR) 85,2000H	N211210048110
C588		nsp	OA10602550	CAP.E.GENERIC	10μF/25V(M) 5x11,P=5(LUXON-GR) 85,2000H	N211210048110
C589		nsp	OA47601640	CAP.E.GENERIC	47μF/16V(M) 5x11,P=5(LUXON-GR) 85,2000H	N211247038110
C590		nsp	OA47601640	CAP.E.GENERIC	47μF/16V(M) 5x11,P=5(LUXON-GR) 85,2000H	N211247038110
C591		nsp	DD95470300	C,CERAMIC CHIP T.C	COG47pF-J/50V-1608REEL	D010470167160
C592		nsp	DD95470300	C,CERAMIC CHIP T.C	COG47pF-J/50V-1608REEL	D010470167160
C593		nsp	DK96104300	C,CERAMIC CHIP HIK	X7R0.1μF-K/50V-1608REEL	D011104577160

NOTE : "nsp" PART IS LISTED FOR REFERENCE ONLY, MARANTZ WILL NOT SUPPLY THESE PARTS

POS. NO	VERS. COLOR	PART NO. (FOR EUR)	PART NO. (MJI)	DESCRIPTION		
C594		nsp	DK96104300	C,CERAMIC CHIP HIK	X7R0.1μF-K/50V-1608REEL	D011104577160
C595		nsp	DD95470300	C,CERAMIC CHIP T.C	COG47pF-J/50V-1608REEL	D010470167160
C596		nsp	DD95470300	C,CERAMIC CHIP T.C	COG47pF-J/50V-1608REEL	D010470167160
C597						
ʃ		nsp	OA10602550	CAP.E.GENERIC	10μF/25V(M) 5x11,P=5(LUXON-GR) 85,2000H	N211210048110
C600						
C601		nsp	DK96104300	C,CERAMIC CHIP HIK	X7R0.1μF-K/50V-1608REEL	D011104577160
C611		nsp	DD95101300	C,CERAMIC CHIP T.C	COG100pF-J/50V-1608REEL	D010101167160
C612		nsp	DD95101300	C,CERAMIC CHIP T.C	COG100pF-J/50V-1608REEL	D010101167160
C613		nsp	DD95101300	C,CERAMIC CHIP T.C	COG100pF-J/50V-1608REEL	D010101167160
C614		nsp	DD95150300	C,CERAMIC CHIP T.C	COG15pF-J/50V-1608REEL	D010150167160
C615		*OF100290R	*OF100290R	C,FILM POLYESTER	ST-0.015μF-J/100V-5RE	D02015306C060
C616		*OF100290R	*OF100290R	C,FILM POLYESTER	ST-0.015μF-J/100V-5RE	D02015306C060
C617		*OF100280R	*OF100280R	C,FILM POLYESTER	ST-0.0033μF-J/100V-5RE	D02033206C060
C618		nsp	OA47505020	CAP.E.GENERIC	4.7μF/50V(M) 5x11,P=5(LUXON-GR) 85,2000H	N211247978110
C619		nsp	DK96104300	C,CERAMIC CHIP HIK	X7R0.1μF-K/50V-1608REEL	D011104577160
C620		nsp	OA47602520	CAP.E.GENERIC	47μF/25V(M) 5x11,P=5(LUXON-GR) 85,2000H	N211247048110
C621		nsp	OA47602520	CAP.E.GENERIC	47μF/25V(M) 5x11,P=5(LUXON-GR) 85,2000H	N211247048110
C622		nsp	DK96104300	C,CERAMIC CHIP HIK	X7R0.1μF-K/50V-1608REEL	D011104577160
C623		nsp	OA47505020	CAP.E.GENERIC	4.7μF/50V(M) 5x11,P=5(LUXON-GR) 85,2000H	N211247978110
C624		*OF100280R	*OF100280R	C,FILM POLYESTER	ST-0.0033μF-J/100V-5RE	D02033206C060
C625		*OF100290R	*OF100290R	C,FILM POLYESTER	ST-0.015μF-J/100V-5RE	D02015306C060
C626		*OF100290R	*OF100290R	C,FILM POLYESTER	ST-0.015μF-J/100V-5RE	D02015306C060
C627		nsp	DD95150300	C,CERAMIC CHIP T.C	COG15pF-J/50V-1608REEL	D010150167160
CNT503		nsp	nsp	CN,WIRE	220MM 12P GILS-12,GILT-12 BK1533#26(2C*6) 2.0	L000221120010
CP114		nsp	nsp	CN,WAFER 2.0MM	TUC-P16X-B1 BD-TO-BD 16P HOUSING ST	L101100031610
CP115		nsp	nsp	CN,WAFER 2.0MM	TUC-P20X-B1 BD-TO-BD 20P HOUSING ST	L101100032010
D501						
ʃ		nsp	*HD201720R	D,SWITCHING	1N4148-52RE 75V 150MA DO-34 (MIC)	K000414803520
D513						
IC501		*HC108110R	*HC108110R	IC,ELECT VR	KIC9459F/SOP24P	J084945900010
IC502		*HC107280R	*HC107280R	IC,ELECT VR	KIC9482F /6CH WITHOUT TONE FLP28	J084948200010
IC503		HC10125090	HC10125090	IC,LOGIC	NJU7313AL-SDIP28P	J040731300010
IC504		*HC108100R	*HC108100R	IC,ANALOG	TC9481F ELECT TONE CONTROL SOP28P	J080948100010
IC505		HC405321Z0	HC405321Z0	IC,LOGIC	BU4053BCF/SOP16P	J040405300110
IC506						
ʃ		HC10102090	HC10102090	IC,LINEAR OP	NJM2068M-SOP8P	J121206800020
IC514						
J436		nsp	nsp	CN,WIRE 1P	JUMPER (0.6/52MM)	L045084006040
J501						
ʃ		nsp	nsp	CN,WIRE 1P	JUMPER (0.6/52MM)	L045084006040
J691						
JACK501		*YT001600R	*YT001600R	TER,RCA 4PIN	DAERYUNG/JK0400450N	G602040045000
JACK502		*YT002650R	*YT002650R	TER,RCA 6PIN	JACK SR7200(B B B)GND=0,0/JK060046EN	G603600460050
JACK503		*YT001600R	*YT001600R	TER,RCA 4PIN	DAERYUNG/JK0400450N	G602040045000
Q501						
ʃ		HT805501B0	HT80550180	SEMI,TR/GE NPN 2SC	KTC2874B TO92-REEL	J502287400010
Q514						
Q515		*BA001360R	*BA001360R	SEMI,BRT/NPN RC	DTC114YS,0.3W/TO92M-REEL	J6020114Y0050
R501		nsp	nsp	R,CARBON FILM	560-J,1/5W-52RE-AX	C00005616P520
R502		nsp	nsp	R,CARBON FILM	560-J,1/5W-52RE-AX	C00005616P520
R502xx		nsp	NN05104610	R,CHIP THICK	100K-J,1/16W-1608REEL	C20001046M160
R503		nsp	nsp	R,CARBON FILM	4.7-J,1/4W-52RE-AX	C0004R7063520
R504		nsp	nsp	R,CARBON FILM	4.7-J,1/4W-52RE-AX	C0004R7063520
R507xx		nsp	NN05221610	R,CHIP THICK	220-J,1/16W-1608REEL	C20002216M160
R512xx		nsp	NN05221610	R,CHIP THICK	220-J,1/16W-1608REEL	C20002216M160
R515		nsp	nsp	R,CARBON FILM	10K-J,1/5W-52RE-AX	C00001036P520
R516xx		nsp	NN05474610	R,CHIP THICK	470K-J,1/16W-1608REEL	C20004746M160
R525		nsp	nsp	R,CARBON FILM	10K-J,1/5W-52RE-AX	C00001036P520
R526		nsp	nsp	R,CARBON FILM	10K-J,1/5W-52RE-AX	C00001036P520
R527		nsp	NN05103610	R,CHIP THICK	10K-J,1/16W-1608REEL	C20001036M160
R528		nsp	nsp	R,CARBON FILM	10K-J,1/5W-52RE-AX	C00001036P520
R529		nsp	NN05103610	R,CHIP THICK	10K-J,1/16W-1608REEL	C20001036M160
R530		nsp	NN05103610	R,CHIP THICK	10K-J,1/16W-1608REEL	C20001036M160

NOTE : "nsp" PART IS LISTED FOR REFERENCE ONLY, MARANTZ WILL NOT SUPPLY THESE PARTS.

POS. NO	VERS. COLOR	PART NO. (FOR EUR)	PART NO. (MJI)	DESCRIPTION		
R532		nsp	nsp	R,CARBON FILM	22K-J,1/5W-52RE-AX	C00002236P520
R536xx		nsp	NN05221610	R,CHIP THICK	220-J,1/16W-1608REEL	C20002216M160
R537		nsp	nsp	R,CARBON FILM	22K-J,1/5W-52RE-AX	C00002236P520
R538		nsp	NN05223610	R,CHIP THICK	22K-J,1/16W-1608REEL	C20002236M160
R539		nsp	nsp	R,CARBON FILM	22K-J,1/5W-52RE-AX	C00002236P520
R540		nsp	nsp	R,CARBON FILM	22K-J,1/5W-52RE-AX	C00002236P520
R541		nsp	NN05223610	R,CHIP THICK	22K-J,1/16W-1608REEL	C20002236M160
R542		nsp	NN05223610	R,CHIP THICK	22K-J,1/16W-1608REEL	C20002236M160
R544		nsp	nsp	R,CARBON FILM	1K-J,1/5W-52RE-AX	C00001026P520
R545		nsp	nsp	R,CARBON FILM	1K-J,1/5W-52RE-AX	C00001026P520
R549xx		nsp	NN05104610	R,CHIP THICK	100K-J,1/16W-1608REEL	C20001046M160
R549SW		nsp	nsp	R,CARBON FILM	100K-J,1/5W-52RE-AX	C00001046P520
R559xx		nsp	NN05471610	R,CHIP THICK	470-J,1/16W-1608REEL	C20004716M160
R567xx		nsp	NN05302610	R,CHIP THICK	3K-J,1/16W-1608REEL	C20003026M160
R567SW		nsp	NN05512610	R,CHIP THICK	5.1K-J,1/16W-1608REEL	C20005126M160
R569xx		nsp	NN05122610	R,CHIP THICK	1.2K-J,1/16W-1608REEL	C20001226M160
R582xx		nsp	NN05683610	R,CHIP THICK	68K-J,1/16W-1608REEL	C20006836M160
R589xx		nsp	NN05471610	R,CHIP THICK	470-J,1/16W-1608REEL	C20004716M160
R590		nsp	nsp	R,CARBON FILM	1K-J,1/5W-52RE-AX	C00001026P520
R591		nsp	nsp	R,CARBON FILM	1K-J,1/5W-52RE-AX	C00001026P520
R592		nsp	NN05102610	R,CHIP THICK	1K-J,1/16W-1608REEL	C20001026M160
R593		nsp	nsp	R,CARBON FILM	1K-J,1/5W-52RE-AX	C00001026P520
R594		nsp	nsp	R,CARBON FILM	1K-J,1/5W-52RE-AX	C00001026P520
R595		nsp	NN05102610	R,CHIP THICK	1K-J,1/16W-1608REEL	C20001026M160
R596		nsp	nsp	R,CARBON FILM	1K-J,1/5W-52RE-AX	C00001026P520
R597		nsp	nsp	R,CARBON FILM	1K-J,1/5W-52RE-AX	C00001026P520
R598		nsp	NN05102610	R,CHIP THICK	1K-J,1/16W-1608REEL	C20001026M160
R599		nsp	nsp	R,CARBON FILM	100-J,1/5W-52RE	C00001016P520
R600		nsp	nsp	R,CARBON FILM	100-J,1/5W-52RE	C00001016P520
R601		nsp	NN05104610	R,CHIP THICK	100K-J,1/16W-1608REEL	C20001046M160
R602		nsp	NN05104610	R,CHIP THICK	100K-J,1/16W-1608REEL	C20001046M160
R603		nsp	nsp	R,CARBON FILM	4.7K-J,1/5W-52RE-AX	C00004726P520
R604		nsp	nsp	R,CARBON FILM	4.7K-J,1/5W-52RE-AX	C00004726P520
R605		nsp	NN05472610	R,CHIP THICK	4.7K-J,1/16W-1608REEL	C20004726M160
R606		nsp	NN05472610	R,CHIP THICK	4.7K-J,1/16W-1608REEL	C20004726M160
R607		nsp	NN05103610	R,CHIP THICK	10K-J,1/16W-1608REEL	C20001036M160
R608		nsp	NN05103610	R,CHIP THICK	10K-J,1/16W-1608REEL	C20001036M160
R609		nsp	nsp	R,CARBON FILM	10K-J,1/5W-52RE-AX	C00001036P520
R610		nsp	nsp	R,CARBON FILM	10K-J,1/5W-52RE-AX	C00001036P520
R611		nsp	NN05103610	R,CHIP THICK	10K-J,1/16W-1608REEL	C20001036M160
R612		nsp	NN05103610	R,CHIP THICK	10K-J,1/16W-1608REEL	C20001036M160
R614		nsp	NN05472610	R,CHIP THICK	4.7K-J,1/16W-1608REEL	C20004726M160
R615						
ʃ		nsp	NN05103610	R,CHIP THICK	10K-J,1/16W-1608REEL	C20001036M160
R618						
R619		nsp	NN05104610	R,CHIP THICK	100K-J,1/16W-1608REEL	C20001046M160
R620		nsp	NN05104610	R,CHIP THICK	100K-J,1/16W-1608REEL	C20001046M160
R621		nsp	nsp	R,CARBON FILM	470-J,1/5W-52RE-AX	C00004716P520
R622		nsp	NN05471610	R,CHIP THICK	470-J,1/16W-1608REEL	C20004716M160
R623		nsp	NN05103610	R,CHIP THICK	10K-J,1/16W-1608REEL	C20001036M160
R623FL		nsp	NN05104610	R,CHIP THICK	100K-J,1/16W-1608REEL	C20001046M160
R623FR		nsp	NN05104610	R,CHIP THICK	100K-J,1/16W-1608REEL	C20001046M160
R624		nsp	NN05103610	R,CHIP THICK	10K-J,1/16W-1608REEL	C20001036M160
R625		nsp	NN05104610	R,CHIP THICK	100K-J,1/16W-1608REEL	C20001046M160
R626		nsp	NN05104610	R,CHIP THICK	100K-J,1/16W-1608REEL	C20001046M160
R627		nsp	NN05103610	R,CHIP THICK	10K-J,1/16W-1608REEL	C20001036M160
R628		nsp	NN05103610	R,CHIP THICK	10K-J,1/16W-1608REEL	C20001036M160
R643		nsp	nsp	R,CARBON FILM	1K-J,1/5W-52RE-AX	C00001026P520
R644		nsp	nsp	R,CARBON FILM	100-J,1/4W-52RE-AX	C000010163520
R645						
ʃ		nsp	NN05105610	R,CHIP THICK	1M-J,1/16W-1608REEL	C20001056M160
R649						
RLY501		*LY000300R	*LY000300R	RELAY	RSB12S DC12V 2A30VDC /SMALL SIGNAL	G680120202020

NOTE : "nsp" PART IS LISTED FOR REFERENCE ONLY, MARANTZ WILL NOT SUPPLY THESE PARTS.

SR6300

POS. NO	VERS. COLOR	PART NO. (FOR EUR)	PART NO. (MJI)	DESCRIPTION		
				SPK A PCB		
C903xx	/K/N	*OF100270R	*OF100270R	C,FILM POLYESTER	ST-0.0022μF-J/100V-5RE	D02022206CD60
C904xxG	/K/N	nsp	nsp	C,CERAMIC HIK AXIAL	X0.0047μF-K/16V-52RE	D005472773530
J940	/K/N	nsp	nsp	CN,WIRE 1P	JUMPER (0.6/52MM)	L045084006040
J946	/K/N	nsp	nsp	CN,WIRE 1P	JUMPER (0.6/52MM)	L045084006040
J947	/K/N	nsp	nsp	CN,WIRE 1P	JUMPER (0.6/52MM)	L045084006040
-		*YT002590R	*YT002590R	TER,BOARD SCREW 4P	R956 (L=BB R=RR)/SH0410370P	G612041037320
-		*YT001290R	*YT001290R	TER,BOARD SCREW 8P	SH0810360P	G614081036O0A
CP101		nsp	nsp	CN,WAFER 2.5MM	PLUG BD,BD 52668-1317 13P 2.5 ANG ZIP	L102526681310
J933						
ʃ		nsp	nsp	CN,WIRE 1P	JUMPER (0.6/52MM)	L045084006040
J954						
				S-VIDEO PCB		
C850						
ʃ	/K/N	nsp	nsp	C,CERAMIC T.C DISC	CH22pF-J/50V-5RE	D000220167060
C853						
C854	/K/N	nsp	nsp	C,CERAMIC HIK AXIAL	Y0.01μF-M/16V-52RE	D005103773530
C855	/K/N	nsp	nsp	C,CERAMIC HIK AXIAL	Y0.01μF-M/16V-52RE	D005103773530
IC807	/K/N	HC700400Z0	HC700400Z0	IC,LOGIC	MM74HCU04MX SOP14 /HEX INVERTER	J040740400100
IC808	/K/N	*HC700310R	*HC700310R	IC,LOGIC	GD74HC00D (GOLDSTAR)	J040740000040
J848	/K/N	nsp	nsp	CN,WIRE 1P	JUMPER (0.6/52MM)	L045084006040
J849	/K/N	nsp	nsp	CN,WIRE 1P	JUMPER (0.6/52MM)	L045084006040
R854	/K/N	nsp	nsp	R,CARBON FILM	1M-J,1/5W-52RE-AX	C00001056P520
R855	/K/N	nsp	nsp	R,CARBON FILM	470-J,1/5W-52RE-AX	C00004716P520
R856	/K/N	nsp	nsp	R,CARBON FILM	1M-J,1/5W-52RE-AX	C00001056P520
R857	/K/N	nsp	nsp	R,CARBON FILM	470-J,1/5W-52RE-AX	C00004716P520
R858	/K/N	nsp	nsp	R,CARBON FILM	1K-J,1/5W-52RE-AX	C00001026P520
R859	/K/N	nsp	nsp	R,CARBON FILM	4.7-J,1/5W-52RE-AX	C0004R706P520
R860	/K/N	nsp	nsp	R,CARBON FILM	220-J,1/5W-52RE-AX	C00002216P520
XTAL802	/K/N	*JX000990R	*JX000990R	CRYSTAL	17.734476MHz HC/49U CL;18pF	E80017R734420
XTAL803	/K/N	*JX000980R	*JX000980R	CRYSTAL	14.31818MHZ,HC49U-CL;18pF	E80014R318040
C840U	/U	nsp	nsp	C,CERAMIC T.C DISC	CH20pF-J/50V-5RE	D000200167060
C841U	/U	nsp	nsp	C,CERAMIC T.C DISC	CH20pF-J/50V-5RE	D000200167060
R843U	/U	nsp	nsp	R,CARBON FILM	470-J,1/5W-52RE-AX	C00004716P520
R844U	/U	nsp	nsp	R,CARBON FILM	1M-J,1/5W-52RE-AX	C00001056P520
XTAL801U	/U	nsp	*JX000980R	CRYSTAL	14.31818MHZ,HC49U-CL;18pF	E80014R318040
-		*YT002540R	*YT002540R	JACK,D6.5	ALL R945 YKF51-5516/S-VHS 3P	G402042190000
-		*YT002560R	*YT002560R	JACK,DIN	AVP9080 DOM YKF51-5512	G403040010010
C801		nsp	OA10605020	CAP,E.GENERIC	10μF/50V(M) 5x11,P=5(LUXON-GR) 85,2000H	N211210078110
C802		nsp	*OA000080R	CAP,E.GENERIC	470μF/6.3V(M) 8X11,P=5(LUXON-GR) 85,2000H	N211247118110
C802N		nsp	DD95470300	C,CERAMIC CHIP T.C	COG47pF-J/50V-1608REEL	D010470167160
C803		nsp	OA10605020	CAP,E.GENERIC	10μF/50V(M) 5x11,P=5(LUXON-GR) 85,2000H	N211210078110
C803N		nsp	DD95470300	C,CERAMIC CHIP T.C	COG47pF-J/50V-1608REEL	D010470167160
C804		nsp	*OA000080R	CAP,E.GENERIC	470μF/6.3V(M) 8X11,P=5(LUXON-GR) 85,2000H	N211247118110
C804N		nsp	DD95470300	C,CERAMIC CHIP T.C	COG47pF-J/50V-1608REEL	D010470167160
C805		nsp	*OA000080R	CAP,E.GENERIC	470μF/6.3V(M) 8X11,P=5(LUXON-GR) 85,2000H	N211247118110
C805N		nsp	DD95470300	C,CERAMIC CHIP T.C	COG47pF-J/50V-1608REEL	D010470167160
C806		nsp	OA10605020	CAP,E.GENERIC	10μF/50V(M) 5x11,P=5(LUXON-GR) 85,2000H	N211210078110
C806N		nsp	DD95470300	C,CERAMIC CHIP T.C	COG47pF-J/50V-1608REEL	D010470167160
C807		nsp	OA47505020	CAP,E.GENERIC	4.7μF/50V(M) 5x11,P=5(LUXON-GR) 85,2000H	N211247978110
C807N		nsp	DD95470300	C,CERAMIC CHIP T.C	COG47pF-J/50V-1608REEL	D010470167160
C808		nsp	OA47505020	CAP,E.GENERIC	4.7μF/50V(M) 5x11,P=5(LUXON-GR) 85,2000H	N211247978110
C809		nsp	OA10605020	CAP,E.GENERIC	10μF/50V(M) 5x11,P=5(LUXON-GR) 85,2000H	N211210078110
C810		nsp	OA10605020	CAP,E.GENERIC	10μF/50V(M) 5x11,P=5(LUXON-GR) 85,2000H	N211210078110
C810A		nsp	DD95470300	C,CERAMIC CHIP T.C	COG47pF-J/50V-1608REEL	D010470167160
C811		nsp	OA47601640	CAP,E.GENERIC	47μF/16V(M) 5x11,P=5(LUXON-GR) 85,2000H	N211247038110
C811A		nsp	DD95470300	C,CERAMIC CHIP T.C	COG47pF-J/50V-1608REEL	D010470167160
C812		nsp	OA47505020	CAP,E.GENERIC	4.7μF/50V(M) 5x11,P=5(LUXON-GR) 85,2000H	N211247978110
C813		nsp	OA47505020	CAP,E.GENERIC	4.7μF/50V(M) 5x11,P=5(LUXON-GR) 85,2000H	N211247978110
C814		nsp	OA10605020	CAP,E.GENERIC	10μF/50V(M) 5x11,P=5(LUXON-GR) 85,2000H	N211210078110
C815		nsp	OA10605020	CAP,E.GENERIC	10μF/50V(M) 5x11,P=5(LUXON-GR) 85,2000H	N211210078110
C816		nsp	OA10701620	CAP,E.GENERIC	100μF/16V(M) 5x11,P=5(LUXON-GR) 85,2000H	N211210138110
C817		nsp	DK98103300	C,CERAMIC CHIP HIK	Y5V0.01μF-Z/50V-1608REEL	D011103597160

NOTE : "nsp" PART IS LISTED FOR REFERENCE ONLY, MARANTZ WILL NOT SUPPLY THESE PARTS.

SR6300

POS. NO	VERS. COLOR	PART NO. (FOR EUR)	PART NO. (MJI)	DESCRIPTION		
C817A		nsp	DK98103300	C,CERAMIC CHIP HIK	Y5V0.01μF-Z/50V-1608REEL	D011103597160
C818		nsp	nsp	C,CERAMIC HIK AXIAL	Y0.01μF-M/16V-52RE	D005103773530
C820		nsp	OA10701620	CAP,E.GENERIC	100μF/16V(M) 5x11,P=5(LUXON-GR) 85,2000H	N211210138110
C821		nsp	DK98103300	C,CERAMIC CHIP HIK	Y5V0.01μF-Z/50V-1608REEL	D011103597160
C821A		nsp	DK98103300	C,CERAMIC CHIP HIK	Y5V0.01μF-Z/50V-1608REEL	D011103597160
C822		nsp	OA10701020	CAP,E.GENERIC	100μF/10V(M) 5X11,P=5(LUXON-GR) 85,2000H	N211210128110
C823		nsp	OA47601640	CAP,E.GENERIC	47μF/16V(M) 5x11,P=5(LUXON-GR) 85,2000H	N211247038110
C824		nsp	OA10605020	CAP,E.GENERIC	10μF/50V(M) 5x11,P=5(LUXON-GR) 85,2000H	N211210078110
C825		nsp	OA22505020	CAP,E.GENERIC	2.2μF/50V(M) 5x11,P=5(LUXON-GR) 85,2000H	N211222978110
C828		nsp	OA10605020	CAP,E.GENERIC	10μF/50V(M) 5x11,P=5(LUXON-GR) 85,2000H	N211210078110
C828A		nsp	OA47601640	CAP,E.GENERIC	47μF/16V(M) 5x11,P=5(LUXON-GR) 85,2000H	N211247038110
C829		nsp	OA47601640	CAP,E.GENERIC	47μF/16V(M) 5x11,P=5(LUXON-GR) 85,2000H	N211247038110
C831		nsp	DD95101300	C,CERAMIC CHIP T.C	COG100pF-J/50V-1608REEL	D010101167160
C832		nsp	OA47601640	CAP,E.GENERIC	47μF/16V(M) 5x11,P=5(LUXON-GR) 85,2000H	N211247038110
C833		nsp	DK98103300	C,CERAMIC CHIP HIK	Y5V0.01μF-Z/50V-1608REEL	D011103597160
C834		nsp	OA10701020	CAP,E.GENERIC	100μF/10V(M) 5X11,P=5(LUXON-GR) 85,2000H	N211210128110
C835		nsp	nsp	C,CERAMIC T.C AXIAL	SL47pF-J/50V-52RE	D001470067520
C836		nsp	OA10505020	CAP,E.GENERIC	1μF/50V(M) 5x11,P=5(LUXON-GR) 85,2000H	N211210978110
C837		nsp	nsp	C,CERAMIC T.C DISC	CH20pF-J/50V-5RE	D000200167060
C838		nsp	DD95101300	C,CERAMIC CHIP T.C	COG100pF-J/50V-1608REEL	D010101167160
C839		nsp	OA10701020	CAP,E.GENERIC	100μF/10V(M) 5X11,P=5(LUXON-GR) 85,2000H	N211210128110
C840A		nsp	OA47601640	CAP,E.GENERIC	47μF/16V(M) 5x11,P=5(LUXON-GR) 85,2000H	N211247038110
C841A		nsp	DK98103300	C,CERAMIC CHIP HIK	Y5V0.01μF-Z/50V-1608REEL	D011103597160
C842		nsp	DK98103300	C,CERAMIC CHIP HIK	Y5V0.01μF-Z/50V-1608REEL	D011103597160
C842A		nsp	DK98103300	C,CERAMIC CHIP HIK	Y5V0.01μF-Z/50V-1608REEL	D011103597160
C843		nsp	nsp	C,CERAMIC T.C DISC	CH20pF-J/50V-5RE	D000200167060
C844		nsp	OA10701020	CAP,E.GENERIC	100μF/10V(M) 5X11,P=5(LUXON-GR) 85,2000H	N211210128110
C845		nsp	nsp	C,CERAMIC HIK AXIAL	B0.001μF-K/50V-52RE	D005102177530
C846		nsp	*OA000060R	CAP,E.GENERIC	0.33μF/50V(M) 5x11,P=5(LUXON-GR) 85,2000H	N211233878110
C847		nsp	DD95101300	C,CERAMIC CHIP T.C	COG100pF-J/50V-1608REEL	D010101167160
C848		nsp	DK96222300	C,CERAMIC CHIP HIK	X7R2200pF-K/50V-1608REEL	D011222777160
C849		nsp	OA10505020	CAP,E.GENERIC	1μF/50V(M) 5x11,P=5(LUXON-GR) 85,2000H	N211210978110
C858		nsp	DD95101300	C,CERAMIC CHIP T.C	COG100pF-J/50V-1608REEL	D010101167160
C858A		nsp	DD95470300	C,CERAMIC CHIP T.C	COG47pF-J/50V-1608REEL	D010470167160
C859		nsp	nsp	C,CERAMIC HIK AXIAL	Y0.01μF-M/16V-52RE	D005103773530
CP108		nsp	nsp	CN,WAFER 2.0MM	TUC-P20X-B1 BD-TO-BD 20P HOUSING ST	L101100032010
CP301SV		nsp	nsp	CN,WAFER 2.0MM	G1L-S-4P-S2T2-EF	L101220040000
D801						
ʃ		nsp	*HD201720R	D,SWITCHING	1N4148-52RE 75V 150MA DO-34 (MIC)	K000414803520
D804						
IC802		HC10210090	HC10210090	IC,MONITOR SW	NJM2296M VIDEO SW SOP16	J171229600010
IC803		HC10210090	HC10210090	IC,MONITOR SW	NJM2296M VIDEO SW SOP16	J171229600010
IC804		*HC800010R	*HC800010R	IC,LOGIC	MM74HC4053MX SOP16 /ANALOG MUX,DEMUX	J040744053040
IC805		*HC107310R	*HC107310R	IC,ANALOG	M35010-001SP ON SCREEN DISP DIP20	J080350100010
IC806		*HC107230R	*HC107230R	IC,ANALOG	BA7046 VIDEO SYNC DIP8	J080704600000
J800						
ʃ		nsp	nsp	CN,WIRE 1P	JUMPER (0.6/52MM)	L045084006040
J808						
J810		nsp	NN05000610	R,CHIP THICK	0-J,1/16W-1608REEL	C20000006M160
J811						
ʃ		nsp	nsp	CN,WIRE 1P	JUMPER (0.6/52MM)	L045084006040
J859						
J861						
ʃ		nsp	NN05000610	R,CHIP THICK	0-J,1/16W-1608REEL	C20000006M160
J866						
J867						
ʃ		nsp	nsp	CN,WIRE 1P	JUMPER (0.6/52MM)	L045084006040
J931A						
L801		nsp	nsp	COIL,FILTER-INDUCTOR	22UH-Q40/17M-R3.4-52RE 02TB	D330220001020
L802		nsp	nsp	COIL,FILTER-INDUCTOR	22UH-Q40/17M-R3.4-52RE 02TB	D330220001020
L804		*FC500010R	*FC500010R	BEAD,COIL	BAS3580T0 3.5PHI*8 52RE	7610035800020
Q801		*BA001190R	*BA001190R	SEMI,BRT/NPN RC	KRC107M,0.4W/TO92M-REEL	J6020107M0010
Q801A		*BA001190R	*BA001190R	SEMI,BRT/NPN RC	KRC107M,0.4W/TO92M-REEL	J6020107M0010
Q803		*BA001210R	*BA001210R	SEMI,BRT/PNP RA	KRA102M,0.3W/TO92M-REEL	J6002202M0010

NOTE : "nsp" PART IS LISTED FOR REFERENCE ONLY, MARANTZ WILL NOT SUPPLY THESE PARTS.

POS. NO	VERS. COLOR	PART NO. (FOR EUR)	PART NO. (MJI)	DESCRIPTION		
Q805		*BA001430R	*BA001430R	SEMI,BRT/PNP RB	TR KRA107M PNP	J601107M00050
Q806		HT805501B0	HT805501B0	SEMI,TR/GE NPN 2SC	KTC2874B TO92-REEL	J502287400010
Q806A		HT805501B0	HT805501B0	SEMI,TR/GE NPN 2SC	KTC2874B TO92-REEL	J502287400010
Q808		*BA001190R	*BA001190R	SEMI,BRT/NPN RC	KRC107M,0.4W/TO92M-REEL	J6020107M0010
Q816		*HT100610R	*HT100610R	SEMI,TR/GE PNP 2SA	2SA933S,0.3W/TO92M-REEL	J5000933S0050
Q851		*HT300890R	*HT300890R	SEMI,TR/GE NPN 2SC	2SC3199-GR/KTC3199-GR BULK	J5023199G0000
Q852		*HT100610R	*HT100610R	SEMI,TR/GE PNP 2SA	2SA933S,0.3W/TO92M-REEL	J5000933S0050
Q852A		*HT100610R	*HT100610R	SEMI,TR/GE PNP 2SA	2SA933S,0.3W/TO92M-REEL	J5000933S0050
Q854		*HT100610R	*HT100610R	SEMI,TR/GE PNP 2SA	2SA933S,0.3W/TO92M-REEL	J5000933S0050
R801		nsp	NN05680610	R,CHIP THICK	68-J,1/16W-1608REEL	C20006806M160
R802		nsp	NN05680610	R,CHIP THICK	68-J,1/16W-1608REEL	C20006806M160
R803						
ʃ		nsp	NN05750610	R,CHIP THICK	75-J,1/16W-1608REEL	C20007506M160
R814						
R815		nsp	nsp	R,CARBON FILM	2.2-J,1/5W-52RE-AX	C0002R206P520
R816		nsp	nsp	R,CARBON FILM	1K-J,1/5W-52RE-AX	C00001026P520
R816A		nsp	nsp	R,CARBON FILM	1K-J,1/5W-52RE-AX	C00001026P520
R817		nsp	nsp	R,CARBON FILM	1-J,1/5W-52RE-AX	C0001R006P520
R818		nsp	nsp	R,CARBON FILM	2.2K-J,1/5W-52RE-AX	C00002226P520
R818A		nsp	nsp	R,CARBON FILM	2.2K-J,1/5W-52RE-AX	C00002226P520
R823		nsp	NN05224610	R,CHIP THICK	220K-J,1/16W-1608REEL	C20002246M160
R823A		nsp	nsp	R,CARBON FILM	75-J,1/5W-52RE-AX	C00007506P520
R824		nsp	nsp	R,CARBON FILM	10-J,1/5W-52RE-AX	C00001006P520
R825		nsp	NN05221610	R,CHIP THICK	220-J,1/16W-1608REEL	C20002216M160
R826		nsp	NN05103610	R,CHIP THICK	10K-J,1/16W-1608REEL	C20001036M160
R827		nsp	NN05104610	R,CHIP THICK	100K-J,1/16W-1608REEL	C20001046M160
R828		nsp	NN05104610	R,CHIP THICK	100K-J,1/16W-1608REEL	C20001046M160
R829		nsp	nsp	R,CARBON FILM	100K-J,1/5W-52RE-AX	C00001046P520
R830		nsp	NN05104610	R,CHIP THICK	100K-J,1/16W-1608REEL	C20001046M160
R831		nsp	NN05102610	R,CHIP THICK	1K-J,1/16W-1608REEL	C20001026M160
R832		nsp	NN05471610	R,CHIP THICK	470-J,1/16W-1608REEL	C20004716M160
R833		nsp	NN05103610	R,CHIP THICK	10K-J,1/16W-1608REEL	C20001036M160
R834		nsp	NN05822610	R,CHIP THICK	8.2K-J,1/16W-1608REEL	C20008226M160
R835		nsp	NN05153610	R,CHIP THICK	15K-J,1/16W-1608REEL	C20001536M160
R836		nsp	NN05102610	R,CHIP THICK	1K-J,1/16W-1608REEL	C20001026M160
R837		nsp	NN05473610	R,CHIP THICK	47K-J,1/16W-1608REEL	C20004736M160
R838		nsp	NN05333610	R,CHIP THICK	33K-J,1/16W-1608REEL	C20003336M160
R839		nsp	nsp	R,CARBON FILM	1K-J,1/5W-52RE-AX	C00001026P520
R840		nsp	nsp	R,CARBON FILM	1K-J,1/5W-52RE-AX	C00001026P520
R841		nsp	nsp	R,CARBON FILM	1K-J,1/5W-52RE-AX	C00001026P520
R842		nsp	NN05101610	R,CHIP THICK	100-J,1/16W-1608REEL	C20001016M160
R845		nsp	nsp	R,CARBON FILM	2.2K-J,1/5W-52RE-AX	C00002226P520
R846		nsp	NN05222610	R,CHIP THICK	2.2K-J,1/16W-1608REEL	C20002226M160
R847		nsp	NN05103610	R,CHIP THICK	10K-J,1/16W-1608REEL	C20001036M160
R848		nsp	nsp	R,CARBON FILM	330-J,1/5W-52RE-AX	C00003316P520
R849		nsp	NN05105610	R,CHIP THICK	1M-J,1/16W-1608REEL	C20001056M160
R850		nsp	NN05154610	R,CHIP THICK	150K-J,1/16W-1608REEL	C20001546M160
R851		nsp	nsp	R,CARBON FILM	470K-J,1/5W-52RE-AX	C00004746P520
R852		nsp	NN05333610	R,CHIP THICK	33K-J,1/16W-1608REEL	C20003336M160
R852A		nsp	NN05123610	R,CHIP THICK	12K-J,1/16W-1608REEL	C20001236M160
R853		nsp	NN05474610	R,CHIP THICK	470K-J,1/16W-1608REEL	C20004746M160
R861		nsp	nsp	R,CARBON FILM	100-J,1/5W-52RE	C00001016P520
R861A		nsp	nsp	R,CARBON FILM	47K-J,1/5W-52RE-AX	C00004736P520
R862		nsp	nsp	R,CARBON FILM	47K-J,1/5W-52RE-AX	C00004736P520
R862A		nsp	nsp	R,CARBON FILM	100-J,1/5W-52RE	C00001016P520
R863		nsp	nsp	R,CARBON FILM	100-J,1/5W-52RE	C00001016P520
R863A		nsp	nsp	R,CARBON FILM	12K-J,1/5W-52RE-AX	C00001236P520
				VIDEO PCB		
-		*YT002610R	*YT002610R	TER,RCA 2PIN	RD-7106(Y Y)GND=0/JC0200095N	G601200092020
-		*YT002630R	*YT002630R	TER,RCA 3PIN	JACK RD7106 (Y Y Y)GND=0,0/JC0300012FN	G606300125040
C871		nsp	nsp	C,CERAMIC T.C AXIAL	SL47pF-J/50V-52RE	D001470067520
C873		nsp	*OA000080R	CAP.E.GENERIC	470μF/6.3V(M) 8X11,P=5(LUXON-GR) 85,2000H	N211247118110
C874		nsp	nsp	C,CERAMIC T.C AXIAL	SL47pF-J/50V-52RE	D001470067520

NOTE : "nsp" PART IS LISTED FOR REFERENCE ONLY, MARANTZ WILL NOT SUPPLY THESE PARTS.

POS. NO	VERS. COLOR	PART NO. (FOR EUR)	PART NO. (MJI)	DESCRIPTION		
C875		nsp	*OA000080R	CAP.E.GENERIC	470μF/6.3V(M) 8X11,P=5(LUXON-GR) 85,2000H	N211247118110
C876		nsp	nsp	C,CERAMIC T.C AXIAL	SL47pF-J/50V-52RE	D001470067520
C877		nsp	*OA000080R	CAP.E.GENERIC	470μF/6.3V(M) 8X11,P=5(LUXON-GR) 85,2000H	N211247118110
C878						
ʃ		nsp	OA10605020	CAP.E.GENERIC	10μF/50V(M) 5x11,P=5(LUXON-GR) 85,2000H	N211210078110
C881						
C882		nsp	OA47601640	CAP.E.GENERIC	47μF/16V(M) 5x11,P=5(LUXON-GR) 85,2000H	N211247038110
C883		nsp	nsp	C,CERAMIC HIK AXIAL	Y0.01μF-M/16V-52RE	D005103773530
C884		nsp	nsp	C,CERAMIC HIK AXIAL	Y0.01μF-M/16V-52RE	D005103773530
C885		nsp	OA47601640	CAP.E.GENERIC	47μF/16V(M) 5x11,P=5(LUXON-GR) 85,2000H	N211247038110
C886		nsp	OA10605020	CAP.E.GENERIC	10μF/50V(M) 5x11,P=5(LUXON-GR) 85,2000H	N211210078110
C887		nsp	nsp	C,CERAMIC HIK AXIAL	B100pF-K/50V-52RE	D005101177520
C888		nsp	nsp	C,CERAMIC HIK AXIAL	Y0.01μF-M/16V-52RE	D005103773530
C889		nsp	OA10701020	CAP.E.GENERIC	100μF/10V(M) 5X11,P=5(LUXON-GR) 85,2000H	N211210128110
C890		nsp	OA10605020	CAP.E.GENERIC	10μF/50V(M) 5x11,P=5(LUXON-GR) 85,2000H	N211210078110
C891		nsp	OA22505020	CAP.E.GENERIC	2.2μF/50V(M) 5x11,P=5(LUXON-GR) 85,2000H	N211229978110
C892		nsp	nsp	C,CERAMIC HIK AXIAL	B100pF-K/50V-52RE	D005101177520
C894		nsp	OA10605020	CAP.E.GENERIC	10μF/50V(M) 5x11,P=5(LUXON-GR) 85,2000H	N211210078110
C895		nsp	OA47601640	CAP.E.GENERIC	47μF/16V(M) 5x11,P=5(LUXON-GR) 85,2000H	N211247038110
C895A		nsp	nsp	C,CERAMIC T.C AXIAL	SL47pF-J/50V-52RE	D001470067520
C896		nsp	nsp	C,CERAMIC HIK AXIAL	B100pF-K/50V-52RE	D005101177520
CP109		nsp	nsp	CN.WAFER 2.0MM	TUC-P20X-B1 BD-TO-BD 20P HOUSING ST	L101100032010
CP301CV		nsp	nsp	CN.WAFER 2.0MM	GIL-S-2P-S2T2-EF	L101220020000
D870						
ʃ		nsp	*HD201720R	D,SWITCHING	1N4148-52RE 75V 150MA DO-34 (MIC)	K000414803520
D884						
IC872		HC10210090	HC10210090	IC,MONITOR SW	NJM2296M VIDEO SW SOP16	J171229600010
IC873		*HC800010R	*HC800010R	IC,LOGIC	MM74HC4053MX SOP16 /ANALOG MUX,DEMUX	J040744053040
IC874		*HC400010R	*HC400010R	IC,LOGIC	BU4094BCF-E2 SHIFT RESISTOR SOP16	J040140940030
J901						
ʃ		nsp	nsp	CN,WIRE 1P	JUMPER (0.6/52MM)	L045084006040
J923						
Q821		*HT100610R	*HT100610R	SEMI,TR/GE PNP 2SA	2SA933S,0.3W/TO92M-REEL	J5000933S0050
Q822		HT805501B0	HT805501B0	SEMI,TR/GE NPN 2SC	KTC2874B TO92-REEL	J502287400010
Q822A		*HT100610R	*HT100610R	SEMI,TR/GE PNP 2SA	2SA933S,0.3W/TO92M-REEL	J5000933S0050
Q870		*BA001190R	*BA001190R	SEMI,BRT/NPN RC	KRC107M,0.4W/TO92M-REEL	J6020107M0010
Q871		*BA001210R	*BA001210R	SEMI,BRT/PNP RA	KRA102M,0.3W/TO92M-REEL	J6002202M0010
R822A		nsp	nsp	R,CARBON FILM	12K-J,1/5W-52RE-AX	C00001236P520
R864		nsp	nsp	R,CARBON FILM	1K-J,1/5W-52RE-AX	C00001026P520
R865		nsp	nsp	R,CARBON FILM	1K-J,1/5W-52RE-AX	C00001026P520
R871		nsp	nsp	R,CARBON FILM	10K-J,1/5W-52RE-AX	C00001036P520
R873		nsp	nsp	R,CARBON FILM	68-J,1/5W-52RE-AX	C00006806P520
R874		nsp	nsp	R,CARBON FILM	1K-J,1/5W-52RE-AX	C00001026P520
R874A		nsp	nsp	R,CARBON FILM	100-J,1/5W-52RE	C00001016P520
R875		nsp	nsp	R,CARBON FILM	10K-J,1/5W-52RE-AX	C00001036P520
R876		nsp	nsp	R,CARBON FILM	75-J,1/5W-52RE-AX	C00007506P520
R877		nsp	nsp	R,CARBON FILM	10K-J,1/5W-52RE-AX	C00001036P520
R878						
ʃ		nsp	nsp	R,CARBON FILM	75-J,1/5W-52RE-AX	C00007506P520
R882						
R883		nsp	nsp	R,CARBON FILM	2.2K-J,1/5W-52RE-AX	C00002226P520
R883A		nsp	nsp	R,CARBON FILM	47K-J,1/5W-52RE-AX	C00004736P520
R884		nsp	nsp	R,CARBON FILM	1-J,1/5W-52RE-AX	C0001R006P520
R885		nsp	nsp	R,CARBON FILM	2.2-J,1/5W-52RE-AX	C0002R206P520
R886		nsp	nsp	R,CARBON FILM	47K-J,1/5W-52RE-AX	C00004736P520
R889		nsp	nsp	R,CARBON FILM	220K-J,1/5W-52RE-AX	C00002246P520
R890		nsp	nsp	R,CARBON FILM	10-J,1/5W-52RE-AX	C00001006P520
R891		nsp	nsp	R,CARBON FILM	220-J,1/5W-52RE-AX	C00002216P520
R895		nsp	nsp	R,CARBON FILM	100K-J,1/5W-52RE-AX	C00001046P520
R897		nsp	nsp	R,CARBON FILM	10K-J,1/5W-52RE-AX	C00001036P520
R899		nsp	nsp	R,CARBON FILM	1K-J,1/5W-52RE-AX	C00001026P520
				POWER PCB		
-	/U	nsp	nsp	P.C.B INS ASSY	SR6300/U1B(MARANTZ)POWER-AXIAL	7027061885A10

NOTE : "nsp" PART IS LISTED FOR REFERENCE ONLY, MARANTZ WILL NOT SUPPLY THESE PARTS.

SR6300

POS. NO	VERS. COLOR	PART NO. (FOR EUR)	PART NO. (MJI)	DESCRIPTION		
-	/U	nsp	nsp	P.C.B INS ASSY	SR6300/U1B(MARANTZ)/POWER-MANUAL	7027061885M10
-	/U	nsp	nsp	P.C.B INS ASSY	SR6300/U1B(MARANTZ)/POWER-RADIAL	7027061885R10
⚠ OUT710	/U	nsp	*YT002810R	SOCKET,POW RECEPT	AC OUTLET CCT1304-0212	G435040070000
CNT953	/K	nsp	nsp	CN,WIRE	120/3P 210-05=YH396-05V WH1617#22 7.92	L000121030070
CP713	/K/N	nsp	nsp	CN,WAFER 3.96MM	35328-0210	L104353280200
C710		*OF100300R	*OF100300R	C,FILM POLYESTER	ST-0.047μF-J/100V-5RE	D02047306C060
C711		*OF100300R	*OF100300R	C,FILM POLYESTER	ST-0.047μF-J/100V-5RE	D02047306C060
C712		*OF100300R	*OF100300R	C,FILM POLYESTER	ST-0.047μF-J/100V-5RE	D02047306C060
C713		nsp	nsp	C,CERAMIC SEMI DISC	F0.1μF-Z/50V-5RE PI6	D006104597050
⚠ C714		DK17472900	DK17472900	C,CERAMIC AC(SAFETY)	DE2F3KH108MN4A(DE1310-469E472M) P10	D00847208K060
C717		nsp	OA47702520	CAP.E.GENERIC	470μF/25V(M) 10x15,P=5(LUXON-GR) 85,2000H	N211247148110
C718		nsp	OA10505020	CAP.E.GENERIC	1μF/50V(M) 5x11,P=5(LUXON-GR) 85,2000H	N211210978110
C719		nsp	OA22705020	CAP.E.GENERIC	220μF/50V(M) 10x17,P=5(LUXON-GR) 85,2000H	N211222178110
CN119		nsp	nsp	CN,WAFER 2.5MM	5267-04A 4P	L102526700400
CP711		nsp	nsp	CN,WAFER 3.96MM	35328-0210	L104353280200
CP712		nsp	nsp	CN,WAFER 7.92MM	YW396V(03AV)	L108039602010
CP715		nsp	nsp	CN,WAFER 2.0MM	G1L-S-4P-S2T2-EF	L101220040000
CP716		nsp	nsp	CN,WAFER 2.0MM	G1L-S-5P-S2T2-EF	L101220050000
D710						
⟆		nsp	*HD201570R	D,SWITCHING	IN4007 52REEL 1000V 1A	K000400700520
D713						
D714		nsp	*HD201720R	D,SWITCHING	1N4148-52RE 75V 150MA DO-34 (MIC)	K000414803520
D715		nsp	*HD201720R	D,SWITCHING	1N4148-52RE 75V 150MA DO-34 (MIC)	K000414803520
D719		nsp	*HD201570R	D,SWITCHING	IN4007 52REEL 1000V 1A	K000400700520
⚠ F711	/N/U	*FS000950R	*FS000950R	FUSE GLASS 20MM	T2.5A /250V-SVBRTC(K) 218	N751222501110
F711A	/N/U	nsp	nsp	HOLDER,FUSE CLIP	PI5.2-REEL	G645000050010
F711B	/N/U	nsp	nsp	HOLDER,FUSE CLIP	PI5.2-REEL	G645000050010
⚠ F712	/K/U	nsp	*FS000940R	FUSE CERAMIC 20MM	T8A /250V-SVBRTC(K) 215	N752228001110
⚠ F712	/N	*FS000960R	*FS000960R	FUSE GLASS 20MM	T6.3A /250V-SVBRTC(K) 218	N751226301110
F712A		nsp	nsp	HOLDER,FUSE CLIP	PI5.2-REEL	G645000050010
F712B		nsp	nsp	HOLDER,FUSE CLIP	PI5.2-REEL	G645000050010
⚠ F715	/U	nsp	*FS000950R	FUSE GLASS 20MM	T2.5A /250V-SVBRTC(K) 218	N751222501110
F715A	/U	nsp	nsp	HOLDER,FUSE CLIP	PI5.2-REEL	G645000050010
F715B	/U	nsp	nsp	HOLDER,FUSE CLIP	PI5.2-REEL	G645000050010
GND711		nsp	nsp	TERMINAL	ALL PBST/GND PLATE-REEL	3790040876010
IC710		HC38906090	HC38906090	IC,LINEAR-REGULATOR	MC7806CT TO220 (ON SEMI)(METAL TYPE)	J126780600160
J701		nsp	nsp	CN,WIRE 1P	JUMPER (0.6/52MM)	L045084006040
J716	/N/U	nsp	nsp	CN,WIRE 1P	JUMPER (0.6/52MM)	L045084006040
J716U	/U	nsp	nsp	CN,WIRE 1P	JUMPER (0.6/52MM)	L045084006040
Q714	/K/U	nsp	*BA001190R	SEMI,BRT/NPN RC	KRC107M,0.4W/TO92M-REEL	J6020107M0010
⚠ OUT710	/N	*YT002820R	*YT002820R	SOCKET,POW.RECEPT.	AC OUTLET YKE31-0090	G435040110000
L710		nsp	nsp	COIL,FILTER-INDUCTOR	10UH-Q40/24M-R2.5-52RE 02TB	D330100700520
L711		nsp	nsp	COIL,FILTER-INDUCTOR	10UH-Q40/24M-R2.5-52RE 02TB	D330100700520
L712		nsp	nsp	COIL,FILTER-INDUCTOR	10UH-Q40/24M-R2.5-52RE 02TB	D330100700520
Q711		*BA001190R	*BA001190R	SEMI,BRT/NPN RC	KRC107M,0.4W/TO92M-REEL	J6020107M0010
Q712		*HT100600R	*HT100600R	SEMI,TR/GE PNP 2SA	KSA916Y,0.9W/TO92L-REEL	J5000916Y0050
R710U	/U	nsp	nsp	R,METAL FILM 100PPM	ERC-12UGK225-BULK	C060022574000
⚠ T710	/K	nsp	*TS001680R	POWER TRANS	AVR1603(GE1)115,230V/50,60HZ STAND BY 35*15	8200350150140
⚠ T710	/N	*TS001690R	*TS001690R	POWER TRANS	AVR1603(KE2)230V/50HZ STAND BY 35*15	8200350150120
⚠ T710	/U	nsp	*TS001700R	POWER TRANS	AVR1603(KE3)120V/60HZ STAND BY 35*15	8200350150110
R712		nsp	nsp	R,CARBON FILM	470-J,1/5W-52RE-AX	C00004716P520
R713		nsp	nsp	R,CARBON FILM	10K-J,1/5W-52RE-AX	C00001036P520
R714		nsp	nsp	R,CARBON FILM	15K-J,1/5W-52RE-AX	C00001536P520
R716		nsp	nsp	R,FIXED,METAL	RN-T-1/4WJ-47 2.8*6.4(MAX)	N112113647010
R718		nsp	nsp	R,CARBON FILM	1.8K-J,1/5W-52RE-AX	C00001826P520
⚠ RY710		*LY000200R	*LY000200R	RELAY	HR-CR7-DC12V/10A	G680000210000
ZD711		*HD301980R	*HD301980R	D,ZENER	MTZJ7.5B-0.5W/5MA-52MM	K06007R544520
ZD712		*HD302000R	*HD302000R	D,ZENER	MTZJ15B-0.5W/5MA-52MM	K06015R044520
ZD713		*HD302000R	*HD302000R	D,ZENER	MTZJ15B-0.5W/5MA-52MM	K06015R044520
ZD715		HD30431000	HD30431000	D,ZENER	MTZJ4.3B-0.5W/5MA-52MM	K06004R344520
ZD716	/K/U	nsp	*HD301950R	D,ZENER	MTZJ20B-0.5W/5MA-52MM	K06020R044520
				AMP PCB		
-		nsp	nsp	CN,WIRE	80MM/10P 5264-10=5395-10 RD1007#20 2.5MM	L000800100030

NOTE : "nsp" PART IS LISTED FOR REFERENCE ONLY, MARANTZ WILL NOT SUPPLY THESE PARTS

SR6300

POS. NO	VERS. COLOR	PART NO. (FOR EUR)	PART NO. (MJI)	DESCRIPTION		
-		nsp	nsp	CN,WIRE	80MM/9P 5264-09=5395-09 RD1007#20 2.5MM	L000800090020
C201xx		nsp	OA47505020	CAP.E.GENERIC	4.7μF/50V(M) 5x11,P=5(LUXON-GR) 85,2000H	N211247978110
C202xx		nsp	nsp	C,CERAMIC HIK AXIAL	B330pF-K/50V-52RE	D005331277520
C203xx		nsp	nsp	C,CERAMIC HIK AXIAL	B0.001μF-K/50V-52RE	D005102177530
C204xx		nsp	OA22605020	CAP.E.GENERIC	22μF/50V(M) 5x11,P=5(LUXON-GR) 85,2000H	N211222078110
C206xx		nsp	OA22701020	CAP.E.GENERIC	220μF/10V(M) 6.3x11,P=5(LUXON-GR) 85,2000H	N211222128110
C209xx		nsp	OA10605020	CAP.E.GENERIC	10μF/50V(M) 5x11,P=5(LUXON-GR) 85,2000H	N211210078110
C210xx		nsp	*OA000090R	CAP.E.GENERIC	47μF/100V(M) 10x15,P=5(LUXON-GR) 85,2000H	N2112470C8110
C211xx		nsp	*OA000090R	CAP.E.GENERIC	47μF/100V(M) 10x15,P=5(LUXON-GR) 85,2000H	N2112470C8110
C212xx		nsp	nsp	C,CERAMIC HIK DISC	F0.022μF-Z/50V-5RE	D004223597050
C214xx		nsp	nsp	C,CERAMIC T.C AXIAL	SL4.7pF-K/50V-52RE	D0014R7077530
C215xx		nsp	nsp	C,CERAMIC HIK AXIAL	B100pF-K/50V-52RE	D005101177520
CP201		nsp	nsp	CN,WAFER 2.0MM	GIL-S-12P-S2T2-EF	L101220120000
D202xx		nsp	*HD201720R	D,SWITCHING	1N4148-52RE 75V 150MA DO-34 (MIC)	K000414803520
D203xx		nsp	*HD201720R	D,SWITCHING	1N4148-52RE 75V 150MA DO-34 (MIC)	K000414803520
J201						
⟆		nsp	nsp	CN,WIRE 1P	JUMPER (0.6/52MM)	L045084006040
J277						
L201xx		nsp	nsp	COIL,FILTER-INDUCTOR	INDUCTOR COIL J9000031	D330900001320
Q201xx		*HT100590R	*HT100590R	SEMI,TR/GE PNP 2SA	KSA992F,0.5W/TO92-REEL	J5000992F0050
Q202xx		*HT100590R	*HT100590R	SEMI,TR/GE PNP 2SA	KSA992F,0.5W/TO92-REEL	J5000992F0050
Q203xx		*HT100590R	*HT100590R	SEMI,TR/GE PNP 2SA	KSA992F,0.5W/TO92-REEL	J5000992F0050
Q204xx		*HT100590R	*HT100590R	SEMI,TR/GE PNP 2SA	KSA992F,0.5W/TO92-REEL	J5000992F0050
Q205xx		*HT300860R	*HT300860R	SEMI,TR/GE NPN 2SC	KSC1845F,0.5W/TO92-REEL	J5021845F0000
Q206xx		*HT300860R	*HT300860R	SEMI,TR/GE NPN 2SC	KSC1845F,0.5W/TO92-REEL	J5021845F0000
Q207xx		*HT100590R	*HT100590R	SEMI,TR/GE PNP 2SA	KSA992F,0.5W/TO92-REEL	J5000992F0050
Q208xx		*HT100640R	*HT100640R	SEMI,TR/GE PNP 2SA	KTA1024Y,1W/TO92L-REEL	J5001024Y0050
Q209xx		*HT300920R	*HT300920R	SEMI,TR/GE NPN 2SC	KTC3206Y,1W/TO92L-REEL	J5023206Y0050
Q213xx		*HT200410R	*HT200410R	SEMI TR/GE PNP 2SB	SAP16PY 150W LF550(5P) POWER Tr.	J501151000010
Q214xx		*HT400480R	*HT400480R	SEMI TR/GE NPN 2SD	SAP16NO 150W LF550(5P) POWER Tr.	J503151000010
Q215xx		*HT300860R	*HT300860R	SEMI,TR/GE NPN 2SC	KSC1845F,0.5W/TO92-REEL	J5021845F0000
R201xx		nsp	nsp	R,CARBON FILM	470-J,1/5W-52RE-AX	C00004716P520
R202xx		nsp	nsp	R,CARBON FILM	33K-J,1/5W-52RE-AX	C00003336P520
R203xx		nsp	nsp	R,CARBON FILM	15-J,1/5W-52RE-AX	C00001506P520
R204xx		nsp	nsp	R,CARBON FILM	15-J,1/5W-52RE-AX	C00001506P520
R205xx		nsp	nsp	R,CARBON FILM	750-J,1/5W-52RE-AX	C00007516P520
R206xx		nsp	nsp	R,CARBON FILM	750-J,1/5W-52RE-AX	C00007516P520
R207xx		nsp	nsp	R,CARBON FILM	470-J,1/5W-52RE-AX	C00004716P520
R208xx		nsp	nsp	R,CARBON FILM	68-J,1/5W-52RE-AX	C00006806P520
R209xx		nsp	nsp	R,CARBON FILM	150-J,1/5W-52RE-AX	C00001516P520
R210xx		nsp	nsp	R,CARBON FILM	10K-J,1/5W-52RE-AX	C00001036P520
R211xx		nsp	nsp	R,CARBON FILM	43K-J,1/5W-52RE-AX	C00004336P520
R212xx		nsp	nsp	R,CARBON FILM	1.2K-J,1/5W-52RE-AX	C00001226P520
R213xx		nsp	nsp	R,CARBON FILM	33K-J,1/5W-52RE-AX	C00003336P520
R214xx						
⟆		nsp	nsp	R,CARBON FILM	560-J,1/5W-52RE-AX	C00005616P520
R220xx						
R221xx		nsp	nsp	R,CARBON FILM	82-J,1/5W-52RE-AX	C00008206P520
R222xx		nsp	nsp	R,CARBON FILM	82-J,1/5W-52RE-AX	C00008206P520
R223xx		nsp	nsp	R,CARBON FILM	22K-J,1/5W-52RE-AX	C00002236P520
R224xx		nsp	nsp	R,CARBON FILM	22K-J,1/5W-52RE-AX	C00002236P520
R225xx		nsp	nsp	R,CARBON FILM	4.7-J,1/5W-52RE-AX	C0004R706P520
R228xx		nsp	nsp	R,METAL FILM 100PPM	220-J,1/4W-R,REEL	C060022163050
R229xx		nsp	nsp	R,METAL FILM 100PPM	220-J,1/4W-R,REEL	C060022163050
R231xx		nsp	nsp	R,CARBON FILM	4.7-J,1/5W-52RE-AX	C0004R706P520
R232xx		nsp	nsp	R,CARBON FILM	4.7-J,1/5W-52RE-AX	C0004R706P520
R233xx		nsp	nsp	R,CARBON FILM	10K-J,1/5W-52RE-AX	C00001036P520
R235xx		nsp	nsp	R,CARBON FILM	10K-J,1/5W-52RE-AX	C00001036P520
R236xx		nsp	nsp	R,CARBON FILM	2.2K-J,1/5W-52RE-AX	C00002226P520
R237xx						
⟆		nsp	nsp	R,CARBON FILM	39-J,1/5W-52RE-AX	C00003906P520
R240xx						
R241xx		nsp	nsp	R,CARBON FILM	150K-J,1/5W-52RE-AX	C00001546P520
R245xx		*NR000010R	*NR000010R	R,FIXED,METAL	RNS-RT-2WJ-0.47 4.3*11.1(MAX)	N112136647810

NOTE : "nsp" PART IS LISTED FOR REFERENCE ONLY, MARANTZ WILL NOT SUPPLY THESE PARTS

POS. NO	VERS. COLOR	PART NO. (FOR EUR)	PART NO. (MJI)	DESCRIPTION		
R246xxx		*NR000010R	*NR000010R	R,FIXED,METAL	RNS-RT-2WJ-0.47 4.3*11.1(MAX)	N112136647810
				DSP PCB		
-		nsp	nsp	SOCKET,IC704	IC SOCKET 32PIN	G450320000010
C701						
ʃ		nsp	DK98104300	C,CERAMIC CHIP HIK	Y5V0.1μF-Z/50V-1608REEL	D011104597160
C706						
C707		nsp	DD95220300	C,CERAMIC CHIP T.C	COG22pF-J/50V-1608REEL	D010220167160
C708		nsp	OA47601050	CAP,E,GENERIC	47μF/10V(M) 5X11,P=5(LUXON-GR) 85,2000H	N211247028110
C709		nsp	OA47601050	CAP,E,GENERIC	47μF/10V(M) 5X11,P=5(LUXON-GR) 85,2000H	N211247028110
C710		nsp	OA47601050	CAP,E,GENERIC	47μF/10V(M) 5X11,P=5(LUXON-GR) 85,2000H	N211247028110
C711						
ʃ		nsp	DD95220300	C,CERAMIC CHIP T.C	COG22pF-J/50V-1608REEL	D010220167160
C715						
C716		nsp	DK98104300	C,CERAMIC CHIP HIK	Y5V0.1μF-Z/50V-1608REEL	D011104597160
C717		nsp	OA33505020	CAP,E,GENERIC	3.3μF/50V(M) 5x11,P=5(LUXON-GR) 85,2000H	N211233978110
C718		nsp	OA33505020	CAP,E,GENERIC	3.3μF/50V(M) 5x11,P=5(LUXON-GR) 85,2000H	N211233978110
C719		nsp	DK98104300	C,CERAMIC CHIP HIK	Y5V0.1μF-Z/50V-1608REEL	D011104597160
C720		nsp	OA33505020	CAP,E,GENERIC	3.3μF/50V(M) 5x11,P=5(LUXON-GR) 85,2000H	N211233978110
C721		nsp	DK98104300	C,CERAMIC CHIP HIK	Y5V0.1μF-Z/50V-1608REEL	D011104597160
C722		nsp	DD95220300	C,CERAMIC CHIP T.C	COG22pF-J/50V-1608REEL	D010220167160
C723		nsp	DD95220300	C,CERAMIC CHIP T.C	COG22pF-J/50V-1608REEL	D010220167160
C724		nsp	DD95220300	C,CERAMIC CHIP T.C	COG22pF-J/50V-1608REEL	D010220167160
C725		nsp	DK98104300	C,CERAMIC CHIP HIK	Y5V0.1μF-Z/50V-1608REEL	D011104597160
C726		nsp	OA10701020	CAP,E,GENERIC	100μF/10V(M) 5X11,P=5(LUXON-GR) 85,2000H	N211210128110
C727		nsp	OA10505020	CAP,E,GENERIC	1μF/50V(M) 5x11,P=5(LUXON-GR) 85,2000H	N211210978110
C728		nsp	DK98104300	C,CERAMIC CHIP HIK	Y5V0.1μF-Z/50V-1608REEL	D011104597160
C729		nsp	OA10505020	CAP,E,GENERIC	1μF/50V(M) 5x11,P=5(LUXON-GR) 85,2000H	N211210978110
C730		nsp	OA10605020	CAP,E,GENERIC	10μF/50V(M) 5x11,P=5(LUXON-GR) 85,2000H	N211210078110
C731		nsp	OA10701020	CAP,E,GENERIC	100μF/10V(M) 5X11,P=5(LUXON-GR) 85,2000H	N211210128110
C732		nsp	DK98104300	C,CERAMIC CHIP HIK	Y5V0.1μF-Z/50V-1608REEL	D011104597160
C733		nsp	DK98104300	C,CERAMIC CHIP HIK	Y5V0.1μF-Z/50V-1608REEL	D011104597160
C734		nsp	OA10701020	CAP,E,GENERIC	100μF/10V(M) 5X11,P=5(LUXON-GR) 85,2000H	N211210128110
C735		nsp	DK98104300	C,CERAMIC CHIP HIK	Y5V0.1μF-Z/50V-1608REEL	D011104597160
C736		nsp	DK98104300	C,CERAMIC CHIP HIK	Y5V0.1μF-Z/50V-1608REEL	D011104597160
C737		nsp	DK98104300	C,CERAMIC CHIP HIK	Y5V0.1μF-Z/50V-1608REEL	D011104597160
C738		nsp	DD95101300	C,CERAMIC CHIP T.C	COG100pF-J/50V-1608REEL	D010101167160
C739		nsp	DK98104300	C,CERAMIC CHIP HIK	Y5V0.1μF-Z/50V-1608REEL	D011104597160
C740		nsp	DK96103300	C,CERAMIC CHIP HIK	X7R0.01μF-K/50V-1608REEL	D011103777160
C741		nsp	DK98104300	C,CERAMIC CHIP HIK	Y5V0.1μF-Z/50V-1608REEL	D011104597160
C742		nsp	DK98104300	C,CERAMIC CHIP HIK	Y5V0.1μF-Z/50V-1608REEL	D011104597160
C743		nsp	DK96103300	C,CERAMIC CHIP HIK	X7R0.01μF-K/50V-1608REEL	D011103777160
C744		nsp	DK98104300	C,CERAMIC CHIP HIK	Y5V0.1μF-Z/50V-1608REEL	D011104597160
C745		nsp	DK98104300	C,CERAMIC CHIP HIK	Y5V0.1μF-Z/50V-1608REEL	D011104597160
C746		nsp	DK96103300	C,CERAMIC CHIP HIK	X7R0.01μF-K/50V-1608REEL	D011103777160
C747		nsp	OA10605020	CAP,E,GENERIC	10μF/50V(M) 5x11,P=5(LUXON-GR) 85,2000H	N211210078110
C748		nsp	DK98104300	C,CERAMIC CHIP HIK	Y5V0.1μF-Z/50V-1608REEL	D011104597160
C749		nsp	DD95270300	C,CERAMIC CHIP T.C	COG27pF-J/50V-1608REEL	D010270167160
C750		nsp	DD95270300	C,CERAMIC CHIP T.C	COG27pF-J/50V-1608REEL	D010270167160
C751		nsp	DK98104300	C,CERAMIC CHIP HIK	Y5V0.1μF-Z/50V-1608REEL	D011104597160
C752		nsp	DK98104300	C,CERAMIC CHIP HIK	Y5V0.1μF-Z/50V-1608REEL	D011104597160
C753		nsp	OA10701020	CAP,E,GENERIC	100μF/10V(M) 5X11,P=5(LUXON-GR) 85,2000H	N211210128110
C754		nsp	DK98104300	C,CERAMIC CHIP HIK	Y5V0.1μF-Z/50V-1608REEL	D011104597160
C755		nsp	*OA000070R	CAP,E,GENERIC	220μF/6.3V(M)6.3X11,P=5(LUXON-GR) 85,2000H	N211222118110
C756		nsp	DK98104300	C,CERAMIC CHIP HIK	Y5V0.1μF-Z/50V-1608REEL	D011104597160
C757		nsp	DK98104300	C,CERAMIC CHIP HIK	Y5V0.1μF-Z/50V-1608REEL	D011104597160
C758		nsp	DK96103300	C,CERAMIC CHIP HIK	X7R0.01μF-K/50V-1608REEL	D011103777160
C759		nsp	DD95471300	C,CERAMIC CHIP T.C	COG470pF-J/50V-1608REEL	D010471167160
C760		nsp	OA47601050	CAP,E,GENERIC	47μF/10V(M) 5X11,P=5(LUXON-GR) 85,2000H	N211247028110
C761		nsp	DK98104300	C,CERAMIC CHIP HIK	Y5V0.1μF-Z/50V-1608REEL	D011104597160
C762		nsp	OA22505020	CAP,E,GENERIC	2.2μF/50V(M) 5x11,P=5(LUXON-GR) 85,2000H	N211222978110
C763		nsp	DK96103300	C,CERAMIC CHIP HIK	X7R0.01μF-K/50V-1608REEL	D011103777160
C764		nsp	OA10605020	CAP,E,GENERIC	10μF/50V(M) 5x11,P=5(LUXON-GR) 85,2000H	N211210078110
C765		nsp	DK98104300	C,CERAMIC CHIP HIK	Y5V0.1μF-Z/50V-1608REEL	D011104597160

NOTE : "nsp" PART IS LISTED FOR REFERENCE ONLY, MARANTZ WILL NOT SUPPLY THESE PARTS.

POS. NO	VERS. COLOR	PART NO. (FOR EUR)	PART NO. (MJI)	DESCRIPTION		
C766		nsp	OA10505020	CAP,E,GENERIC	1μF/50V(M) 5x11,P=5(LUXON-GR) 85,2000H	N211210978110
C767		nsp	DK98104300	C,CERAMIC CHIP HIK	Y5V0.1μF-Z/50V-1608REEL	D011104597160
C780		nsp	OA10605020	CAP,E,GENERIC	10μF/50V(M) 5x11,P=5(LUXON-GR) 85,2000H	N211210078110
C782		nsp	OA10701020	CAP,E,GENERIC	100μF/10V(M) 5X11,P=5(LUXON-GR) 85,2000H	N211210128110
C783		nsp	DK98104300	C,CERAMIC CHIP HIK	Y5V0.1μF-Z/50V-1608REEL	D011104597160
C784		nsp	DD95270300	C,CERAMIC CHIP T.C	COG27pF-J/50V-1608REEL	D010270167160
C785		nsp	DK98104300	C,CERAMIC CHIP HIK	Y5V0.1μF-Z/50V-1608REEL	D011104597160
C787		nsp	DK98104300	C,CERAMIC CHIP HIK	Y5V0.1μF-Z/50V-1608REEL	D011104597160
C788		nsp	DK98104300	C,CERAMIC CHIP HIK	Y5V0.1μF-Z/50V-1608REEL	D011104597160
C789		nsp	OA47601050	CAP,E,GENERIC	47μF/10V(M) 5X11,P=5(LUXON-GR) 85,2000H	N211247028110
C790		nsp	DK98104300	C,CERAMIC CHIP HIK	Y5V0.1μF-Z/50V-1608REEL	D011104597160
C790A		nsp	DK98104300	C,CERAMIC CHIP HIK	Y5V0.1μF-Z/50V-1608REEL	D011104597160
C791		nsp	OA10505020	CAP,E,GENERIC	1μF/50V(M) 5x11,P=5(LUXON-GR) 85,2000H	N211210978110
C792		nsp	DK98104300	C,CERAMIC CHIP HIK	Y5V0.1μF-Z/50V-1608REEL	D011104597160
C793		nsp	OA10701020	CAP,E,GENERIC	100μF/10V(M) 5X11,P=5(LUXON-GR) 85,2000H	N211210128110
C802		nsp	DK96103300	C,CERAMIC CHIP HIK	X7R0.01μF-K/50V-1608REEL	D011103777160
C803		nsp	OA10505020	CAP,E,GENERIC	1μF/50V(M) 5x11,P=5(LUXON-GR) 85,2000H	N211210978110
C804		nsp	DK98104300	C,CERAMIC CHIP HIK	Y5V0.1μF-Z/50V-1608REEL	D011104597160
C805		nsp	DK98104300	C,CERAMIC CHIP HIK	Y5V0.1μF-Z/50V-1608REEL	D011104597160
C806		nsp	OA22505020	CAP,E,GENERIC	2.2μF/50V(M) 5x11,P=5(LUXON-GR) 85,2000H	N211222978110
C807		nsp	OA10605020	CAP,E,GENERIC	10μF/50V(M) 5x11,P=5(LUXON-GR) 85,2000H	N211210078110
C808AFx		nsp	OA10605020	CAP,E,GENERIC	10μF/50V(M) 5x11,P=5(LUXON-GR) 85,2000H	N211210078110
C809AFx		nsp	OA10605020	CAP,E,GENERIC	10μF/50V(M) 5x11,P=5(LUXON-GR) 85,2000H	N211210078110
C810AFx		nsp	DK98104300	C,CERAMIC CHIP HIK	Y5V0.1μF-Z/50V-1608REEL	D011104597160
C811AFx		nsp	DK98104300	C,CERAMIC CHIP HIK	Y5V0.1μF-Z/50V-1608REEL	D011104597160
C812AFx		nsp	DD95101300	C,CERAMIC CHIP T.C	COG100pF-J/50V-1608REEL	D010101167160
C813AFx		nsp	DD95101300	C,CERAMIC CHIP T.C	COG100pF-J/50V-1608REEL	D010101167160
C814AFx		nsp	DK96102300	C,CERAMIC CHIP HIK	X7R1000pF-K/50V-1608REEL	D011102777160
C815		nsp	OA10702520	CAP,E,GENERIC	100μF/25V(M) 6.3x11,P=5(LUXON-GR) 85,2000H	N211210148110
C816		nsp	OA10702520	CAP,E,GENERIC	100μF/25V(M) 6.3x11,P=5(LUXON-GR) 85,2000H	N211210148110
C817xx		nsp	OA10605020	CAP,E,GENERIC	10μF/50V(M) 5x11,P=5(LUXON-GR) 85,2000H	N211210078110
C818xx		nsp	OA10605020	CAP,E,GENERIC	10μF/50V(M) 5x11,P=5(LUXON-GR) 85,2000H	N211210078110
C819xx		nsp	DK96272300	C,CERAMIC CHIP HIK	X7R2700pF-K/50V-1608REEL	D011272777160
C820xx		nsp	DK96272300	C,CERAMIC CHIP HIK	X7R2700pF-K/50V-1608REEL	D011272777160
C821xx		nsp	DD95471300	C,CERAMIC CHIP T.C	COG470pF-J/50V-1608REEL	D010471167160
C822xx		nsp	DD95471300	C,CERAMIC CHIP T.C	COG470pF-J/50V-1608REEL	D010471167160
C823xx		nsp	DK98104300	C,CERAMIC CHIP HIK	Y5V0.1μF-Z/50V-1608REEL	D011104597160
C824xx		nsp	DK98104300	C,CERAMIC CHIP HIK	Y5V0.1μF-Z/50V-1608REEL	D011104597160
C825xx		nsp	OA10605020	CAP,E,GENERIC	10μF/50V(M) 5x11,P=5(LUXON-GR) 85,2000H	N211210078110
C826xx		nsp	DK96332300	C,CERAMIC CHIP HIK	X7R3300pF-K/50V-1608REEL	D011332777160
C827SW		nsp	DK96103300	C,CERAMIC CHIP HIK	X7R0.01μF-K/50V-1608REEL	D011103777160
C828xx		nsp	OA10605020	CAP,E,GENERIC	10μF/50V(M) 5x11,P=5(LUXON-GR) 85,2000H	N211210078110
C830SW		nsp	DD95471300	C,CERAMIC CHIP T.C	COG470pF-J/50V-1608REEL	D010471167160
C831		nsp	OA10605020	CAP,E,GENERIC	10μF/50V(M) 5x11,P=5(LUXON-GR) 85,2000H	N211210078110
C876		nsp	DK96102300	C,CERAMIC CHIP HIK	X7R1000pF-K/50V-1608REEL	D011102777160
CB701						
ʃ		*FC900290R	*FC900290R	BEAD,COIL CHIP	HB-IT2012-121JT(CERATEC)2012REEL	7511010000020
CB717						
CP113		nsp	nsp	CN,WAFER 2.0MM	TUC-P14X-B1 BD-TO-BD 14P HOUSING ST	L101100031410
CP114		nsp	nsp	CN,WAFER 2.0MM	TUC-P16X-B1 BD-TO-BD 16P HOUSING ST	L101100031610
CP115		nsp	nsp	CN,WAFER 2.0MM	TUC-P18X-B1 BD-TO-BD 18P HOUSING ST	L101100031810
D701						
ʃ		nsp	*HD201560R	D,SWITCHING CHIP	KDS160(UF) /USC	K005016000010
D704						
IC701		HC700411Y0	HC700411Y0	IC,LOGIC	74VHCU04 SOP14 /HEX INVERTER	J040740400260
IC702		*HC700330R	*HC700330R	IC,LOGIC	MM74HC151MX SOP16 /8CH DIG. MULTIPLEXER	J040741510040
IC703		*HC900020R	*HC900020R	IC,LINEAR-REGULATOR	RC1117S33ST SOT223 3.3V 1AMP(NO DROP)	J126111733010
IC704		*HC107760R	*HC107760R	IC,MEMORY-EEPROM	M27W401-80B6 4M 80NANO PDIP32	J000274010010
IC705		*HC700360R	*HC700360R	IC,LOGIC	MM74LCX574WMX SOP20 /LOWVOLT DUAL FF	J040745740050
IC706		*HC700360R	*HC700360R	IC,LOGIC	MM74LCX574WMX SOP20 /LOWVOLT DUAL FF	J040745740050
IC707		HC10405030	HC10405030	IC,LOGIC-INTERFACE	LC89055W(ES4)	J046890550010
IC708		*HC700440R	*HC700440R	IC,LOGIC	MM74HC00MTCX QUAD 2-INPUT NAND GATE	J040740000190
IC709		*HC107260R	*HC107260R	IC,ANALOG	CS49326-CL MULTI-CH DECODER(DOLBY/DTS)	J080493260010
IC710		*HC900010R	*HC900010R	IC,LINEAR-REGULATOR	RC1117S25T SOT223 2.5V 1AMP(NO DROP)	J126111725010

NOTE : "nsp" PART IS LISTED FOR REFERENCE ONLY, MARANTZ WILL NOT SUPPLY THESE PARTS.

SR6300

POS. NO	VERS. COLOR	PART NO. (FOR EUR)	PART NO. (MJI)	DESCRIPTION		
R820SW		nsp	NN05392610	R,CHIP THICK	3.9K-J,1/16W-1608REEL	C20003926M160
R821xx		nsp	NN05000610	R,CHIP THICK	0-J,1/16W-1608REEL	C20000006M160
R821SW		nsp	NN05182610	R,CHIP THICK	1.8K-J,1/16W-1608REEL	C20001826M160
R822xx		nsp	NN05151610	R,CHIP THICK	150-J,1/16W-1608REEL	C20001516M160
R823xx		nsp	NN05104610	R,CHIP THICK	100K-J,1/16W-1608REEL	C20001046M160
R824xx		nsp	NN05222610	R,CHIP THICK	2.2K-J,1/16W-1608REEL	C20002226M160
T1		*LC107290R	*LC107290R	COIL,CHOKE	COIL TRANS MATCHING	D300010250000
WIRE701		nsp	nsp	CN,WIRE	160MM/1P B1813TOP-2=B1813TOP-2	L000161010010
XTAL701		*JX000970R	*JX000970R	CRYSTAL	12.288MHZ,HC49U CL=20pF	E80012R288070

NOTE : "nsp" PART IS LISTED FOR REFERENCE ONLY. MARANTZ WILL NOT SUPPLY THESE PARTS.

SR6300

POS. NO	VERS. COLOR	PART NO. (FOR EUR)	PART NO. (MJI)	DESCRIPTION		
IC711		*HC700450R	*HC700450R	IC,LOGIC	MM74LCX244WMX SOP20 /LOWVOLT BUFFER	J040742440150
IC712		*HC700450R	*HC700450R	IC,LOGIC	MM74LCX244WMX SOP20 /LOWVOLT BUFFER	J040742440150
IC713		*HC700350R	*HC700350R	IC,LOGIC	MM74HCT244WMX SOP20 /OCTAL 3STATE BUF.	J040742440160
IC714		*HC108120R	*HC108120R	IC,LOGIC-D/A CONVER	CS4382-KQ 192KHZ 8CH D/A CONV. /TQFP44	J042438200020
IC715		HC10035480	HC10035480	IC,LOGIC-A/D CONVER	AK5380 TSSOP16 /96KHZ 24BIT	J043538000010
IC716		HC10159210	HC10159210	IC,LINEAR OP	BA4510F-T1/SOP8	J121451000010
IC717		HC10159210	HC10159210	IC,LINEAR OP	BA4510F-T1/SOP8	J121451000010
IC718		HC3890509F	HC3890509F	IC,LINEAR-REGULATOR	NJM7805FA,16W-T0220F MOLD	J126780500130
IC719						
ʃ		HC10102090	HC10102090	IC,LINEAR OP	NJM2068M-SOP8P	J121206800020
IC725						
JACK701		*YT002570R	*YT002570R	MODULE	GP1FA502RZ /OPTICAL RCVR 96KHZ SHUTTER	E100150200020
JACK702		*YT002570R	*YT002570R	MODULE	GP1FA502RZ /OPTICAL RCVR 96KHZ SHUTTER	E100150200020
JACK703		*YT002580R	*YT002580R	MODULE	GP1FA502TZ /OPT. TRANSMIT 96KHZ SHUTTER	E100150200030
JACK704		*YT002720R	*YT002720R	TER,RCA 2PIN	DAERYUNG/JC020009UN(B,B),GND 1P/CAP 1P	G601200099070
JACK705		*YT002730R	*YT002730R	TER,RCA 2PIN	DAERYUNG/JC020009XN(B,B),GND 1P/CAP 2P	G601200099060
L701		nsp	nsp	COIL,FILTER-INDUCTOR	4.7UH-Q50/56M-R1.7-5REEL LAL03VB	D3304R7000150
L702		nsp	nsp	COIL,FILTER-INDUCTOR	4.7UH-Q50/56M-R1.7-5REEL LAL03VB	D3304R7000150
L703		nsp	nsp	COIL,FILTER-INDUCTOR	4.7UH-Q50/56M-R1.7-5REEL LAL03VB	D3304R7000150
L704		nsp	nsp	COIL,FILTER-INDUCTOR	2.2UH-Q50/110M-R1.2-5REEL LAL03VB	D3302R2000150
L705		nsp	nsp	COIL,FILTER-INDUCTOR	2.2UH-Q50/110M-R1.2-5REEL LAL03VB	D3302R2000150
L706		nsp	nsp	COIL,FILTER-INDUCTOR	2.2UH-Q50/110M-R1.2-5REEL LAL03VB	D3302R2000150
Q701		*HT300870R	*HT300870R	SEMI,CHIP TR/NPN 2SC	KTC2875B(MB) 0.15W/LOW-ON-RES SOT23(RTK)	J5222875B0010
Q702		BA10023210	BA10023210	SEMI,CHIP TR/PNP 2SA	DTA114EK(14) 0.2W/SMT-REEL	J5200114E0210
Q702AFL		*HT300870R	*HT300870R	SEMI,CHIP TR/NPN 2SC	KTC2875B(MB) 0.15W/LOW-ON-RES SOT23(RTK)	J5222875B0010
Q702AFR		*HT300870R	*HT300870R	SEMI,CHIP TR/NPN 2SC	KTC2875B(MB) 0.15W/LOW-ON-RES SOT23(RTK)	J5222875B0010
Q704		BA20005210	BA20005210	SEMI,CHIP TR/NPN 2SC	DTC114EK(24),0.2W/SMT-REEL	J5220114E0210
Q705		BA10023210	BA10023210	SEMI,CHIP TR/PNP 2SA	DTA114EK(14) 0.2W/SMT-REEL	J5200114E0210
Q706						
ʃ		*HT300870R	*HT300870R	SEMI,CHIP TR/NPN 2SC	KTC2875B(MB) 0.15W/LOW-ON-RES SOT23(RTK)	J5222875B0010
Q712						
R701		nsp	NN05750610	R,CHIP THICK	75-J,1/16W-1608REEL	C20007506M160
R702		nsp	NN05472610	R,CHIP THICK	4.7K-J,1/16W-1608REEL	C20004726M160
R703		nsp	NN05472610	R,CHIP THICK	4.7K-J,1/16W-1608REEL	C20004726M160
R704		nsp	NN05472610	R,CHIP THICK	4.7K-J,1/16W-1608REEL	C20004726M160
R705		nsp	NN05750610	R,CHIP THICK	75-J,1/16W-1608REEL	C20007506M160
R706		nsp	NN05750610	R,CHIP THICK	75-J,1/16W-1608REEL	C20007506M160
R707		nsp	NN05750610	R,CHIP THICK	75-J,1/16W-1608REEL	C20007506M160
R708		nsp	NN05101610	R,CHIP THICK	100-J,1/16W-1608REEL	C20001016M160
R709		nsp	NN05101610	R,CHIP THICK	100-J,1/16W-1608REEL	C20001016M160
R710		nsp	NN05101610	R,CHIP THICK	100-J,1/16W-1608REEL	C20001016M160
R711		nsp	NN05104610	R,CHIP THICK	100K-J,1/16W-1608REEL	C20001046M160
R712		nsp	NN05104610	R,CHIP THICK	100K-J,1/16W-1608REEL	C20001046M160
R713		nsp	NN05104610	R,CHIP THICK	100K-J,1/16W-1608REEL	C20001046M160
R714		nsp	*NN000490R	R,CHIP THICK	91-J,1/16W-1608REEL	C20009106M160
R715		nsp	NN05103610	R,CHIP THICK	10K-J,1/16W-1608REEL	C20001036M160
R716		nsp	NN05103610	R,CHIP THICK	10K-J,1/16W-1608REEL	C20001036M160
R717		nsp	NN05103610	R,CHIP THICK	10K-J,1/16W-1608REEL	C20001036M160
R718		nsp	NN05222610	R,CHIP THICK	2.2K-J,1/16W-1608REEL	C20002226M160
R719		nsp	NN05222610	R,CHIP THICK	2.2K-J,1/16W-1608REEL	C20002226M160
R720		nsp	NN05222610	R,CHIP THICK	2.2K-J,1/16W-1608REEL	C20002226M160
R721		nsp	NN05181610	R,CHIP THICK	180-J,1/16W-1608REEL	C20001816M160
R722		nsp	NN05103610	R,CHIP THICK	10K-J,1/16W-1608REEL	C20001036M160
R723		nsp	NN05330610	R,CHIP THICK	33-J,1/16W-1608REEL	C20003306M160
R724		nsp	NN05103610	R,CHIP THICK	10K-J,1/16W-1608REEL	C20001036M160
R725		nsp	NN05330610	R,CHIP THICK	33-J,1/16W-1608REEL	C20003306M160
R726		nsp	NN05822610	R,CHIP THICK	8.2K-J,1/16W-1608REEL	C20008226M160
R727		nsp	NN05330610	R,CHIP THICK	33-J,1/16W-1608REEL	C20003306M160
R728		nsp	NN05512610	R,CHIP THICK	5.1K-J,1/16W-1608REEL	C20005126M160
R729		nsp	NN05302610	R,CHIP THICK	3K-J,1/16W-1608REEL	C20003026M160
R730		nsp	NN05330610	R,CHIP THICK	33-J,1/16W-1608REEL	C20003306M160
R731		nsp	NN05750610	R,CHIP THICK	75-J,1/16W-1608REEL	C20007506M160
R732		nsp	NN05330610	R,CHIP THICK	33-J,1/16W-1608REEL	C20003306M160
R733		nsp	NN05330610	R,CHIP THICK	33-J,1/16W-1608REEL	C20003306M160

NOTE : "nsp" PART IS LISTED FOR REFERENCE ONLY, MARANTZ WILL NOT SUPPLY THESE PARTS.

SR6300

POS. NO	VERS. COLOR	PART NO. (FOR EUR)	PART NO. (MJI)	DESCRIPTION		
R734		nsp	NN05330610	R,CHIP THICK	33-J,1/16W-1608REEL	C20003306M160
R735		nsp	NN05105610	R,CHIP THICK	1M-J,1/16W-1608REEL	C20001056M160
R736		nsp	NN05330610	R,CHIP THICK	33-J,1/16W-1608REEL	C20003306M160
R738		nsp	NN05330610	R,CHIP THICK	33-J,1/16W-1608REEL	C20003306M160
R739		nsp	NN05103610	R,CHIP THICK	10K-J,1/16W-1608REEL	C20001036M160
R740		nsp	NN05103610	R,CHIP THICK	10K-J,1/16W-1608REEL	C20001036M160
R741		nsp	NN05332610	R,CHIP THICK	3.3K-J,1/16W-1608REEL	C20003326M160
R742						
ʃ		nsp	NN05103610	R,CHIP THICK	10K-J,1/16W-1608REEL	C20001036M160
R746						
R747		nsp	NN05330610	R,CHIP THICK	33-J,1/16W-1608REEL	C20003306M160
R748		nsp	NN05330610	R,CHIP THICK	33-J,1/16W-1608REEL	C20003306M160
R749		nsp	NN05103610	R,CHIP THICK	10K-J,1/16W-1608REEL	C20001036M160
R750		nsp	NN05103610	R,CHIP THICK	10K-J,1/16W-1608REEL	C20001036M160
R751		nsp	NN05330610	R,CHIP THICK	33-J,1/16W-1608REEL	C20003306M160
R752		nsp	NN05472610	R,CHIP THICK	4.7K-J,1/16W-1608REEL	C20004726M160
R753		nsp	NN05472610	R,CHIP THICK	4.7K-J,1/16W-1608REEL	C20004726M160
R754		nsp	NN05472610	R,CHIP THICK	4.7K-J,1/16W-1608REEL	C20004726M160
R755						
ʃ		nsp	NN05330610	R,CHIP THICK	33-J,1/16W-1608REEL	C20003306M160
R758						
R759		nsp	NN05472610	R,CHIP THICK	4.7K-J,1/16W-1608REEL	C20004726M160
R760		nsp	NN05472610	R,CHIP THICK	4.7K-J,1/16W-1608REEL	C20004726M160
R761		nsp	NN05333610	R,CHIP THICK	33K-J,1/16W-1608REEL	C20003336M160
R762		nsp	NN05103610	R,CHIP THICK	10K-J,1/16W-1608REEL	C20001036M160
R763		nsp	NN05222610	R,CHIP THICK	2.2K-J,1/16W-1608REEL	C20002226M160
R764		nsp	NN05472610	R,CHIP THICK	4.7K-J,1/16W-1608REEL	C20004726M160
R780						
ʃ		nsp	NN05330610	R,CHIP THICK	33-J,1/16W-1608REEL	C20003306M160
R789						
R790		nsp	NN05103610	R,CHIP THICK	10K-J,1/16W-1608REEL	C20001036M160
R791		nsp	NN05103610	R,CHIP THICK	10K-J,1/16W-1608REEL	C20001036M160
R792						
ʃ		nsp	NN05330610	R,CHIP THICK	33-J,1/16W-1608REEL	C20003306M160
R796						
R797		nsp	NN05103610	R,CHIP THICK	10K-J,1/16W-1608REEL	C20001036M160
R798		nsp	NN05471610	R,CHIP THICK	470-J,1/16W-1608REEL	C20004716M160
R799		nsp	NN05474610	R,CHIP THICK	470K-J,1/16W-1608REEL	C20004746M160
R800		nsp	NN05105610	R,CHIP THICK	1M-J,1/16W-1608REEL	C20001056M160
R801AFx		nsp	NN05562610	R,CHIP THICK	5.6K-J,1/16W-1608REEL	C20005626M160
R802AFx		nsp	*NN000470R	R,CHIP THICK	2.4K-J,1/16W-1608REEL	C20002426M160
R803AFx		nsp	NN05472610	R,CHIP THICK	4.7K-J,1/16W-1608REEL	C20004726M160
R804AFx		nsp	NN05472610	R,CHIP THICK	4.7K-J,1/16W-1608REEL	C20004726M160
R805AFx		nsp	NN05472610	R,CHIP THICK	4.7K-J,1/16W-1608REEL	C20004726M160
R806AFx		nsp	NN05473610	R,CHIP THICK	47K-J,1/16W-1608REEL	C20004736M160
R807AFx		nsp	NN05472610	R,CHIP THICK	4.7K-J,1/16W-1608REEL	C20004726M160
R808AFx		nsp	NN05562610	R,CHIP THICK	5.6K-J,1/16W-1608REEL	C20005626M160
R809AFx		nsp	NN05103610	R,CHIP THICK	10K-J,1/16W-1608REEL	C20001036M160
R810AFx		nsp	NN05103610	R,CHIP THICK	10K-J,1/16W-1608REEL	C20001036M160
R811AFx		nsp	NN05331610	R,CHIP THICK	330-J,1/16W-1608REEL	C20003316M160
R812xx		nsp	NN05392610	R,CHIP THICK	3.9K-J,1/16W-1608REEL	C20003926M160
R812SW		nsp	*NN000470R	R,CHIP THICK	2.4K-J,1/16W-1608REEL	C20002426M160
R813xx		nsp	NN05392610	R,CHIP THICK	3.9K-J,1/16W-1608REEL	C20003926M160
R813SW		nsp	*NN000470R	R,CHIP THICK	2.4K-J,1/16W-1608REEL	C20002426M160
R814xx		nsp	NN05472610	R,CHIP THICK	4.7K-J,1/16W-1608REEL	C20004726M160
R814SW		nsp	*NN000480R	R,CHIP THICK	7.5K-J,1/16W-1608REEL	C20007526M160
R815xx		nsp	NN05472610	R,CHIP THICK	4.7K-J,1/16W-1608REEL	C20004726M160
R815SW		nsp	*NN000480R	R,CHIP THICK	7.5K-J,1/16W-1608REEL	C20007526M160
R816xx		nsp	NN05102610	R,CHIP THICK	1K-J,1/16W-1608REEL	C20001026M160
R816SW		nsp	NN05821610	R,CHIP THICK	820-J,1/16W-1608REEL	C20008216M160
R817xx		nsp	NN05102610	R,CHIP THICK	1K-J,1/16W-1608REEL	C20001026M160
R817SW		nsp	NN05821610	R,CHIP THICK	820-J,1/16W-1608REEL	C20008216M160
R818xx		nsp	NN05471610	R,CHIP THICK	470-J,1/16W-1608REEL	C20004716M160
R819xx		nsp	NN05473610	R,CHIP THICK	47K-J,1/16W-1608REEL	C20004736M160

NOTE : "nsp" PART IS LISTED FOR REFERENCE ONLY, MARANTZ WILL NOT SUPPLY THESE PARTS